INSPECTION OF FRACTURE CRITICAL BRIDGE MEMBERS

SUPPLEMENT TO THE BRIDGE INSPECTOR'S TRAINING MANUAL

Research, Development, and Technology

Turner-Fairbank Highway Research Center
6300 Georgetown Pike
McLean, Virginia 22101-2296

Report No.
FHWA-IP-86-26

U.S. Department of Transportation
Federal Highway Administration

Final Report
September 1986

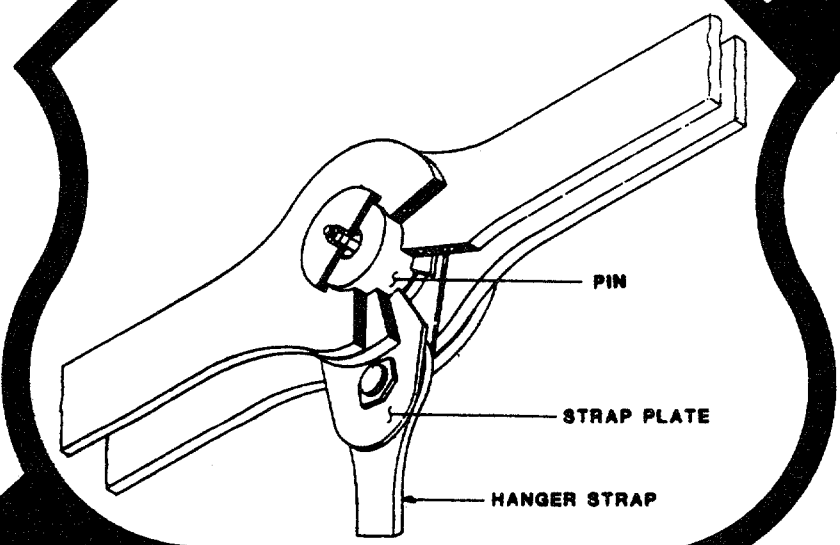

This document is available to the U.S. public through the National Technical Information Service, Springfield, Virginia 22161

FOREWORD

This Implementation Package provides practical procedures for the inspection and rating of various types of bridges with fracture critical members. These procedures should be of interest to bridge and maintenance engineers, technicians, and inspectors. This manual is a supplement to the Bridge Inspector's Training Manual and was prepared in accordance with its procedures and rating systems.

Copies of the manual are being distributed to FHWA Region and Division offices, and to each State highway agency for use by their engineers and inspectors. Additional copies of the manual can be obtained from the Superintendent of Documents, U. S. Government Printing Office, Washington, DC 20402 or the National Technical Information Service, Springfield, Virginia 22161.

R. J. Betsold
Director, Office of Implementation

NOTICE

This document is disseminated under the sponsorship of the Department of Transportation in the interest of information exchange. The United States Government assumes no liability for its contents or use thereof.

The contents of this report reflect the views of the author who is responsible for the facts and the accuracy of the data presented herein. The contents do not necessarily reflect the policy of the Department of Transportation.

This report does not constitute a standard, specification, or regulation. The United States Government does not endorse products or manufacturers. Trade or manufacturers' names appear herein only because they are considered essential to the objective of this document.

For sale by the Superintendent of Documents, U.S. Government Printing Office, Washington, D.C. 20402

Technical Report Documentation Page

1. Report No. FHWA-IP-86-26	2. Government Accession No.	3. Recipient's Catalog No.
4. Title and Subtitle "Inspection of Fracture Critical Bridge Members"		5. Report Date September 1986
		6. Performing Organization Code
7. Author(s) James W. Harland, PE (Principal Investigator) R.L. Purvis, D.R. Graber, Dr. P. Albrecht, T.S. Flournoy		8. Performing Organization Report No.
9. Performing Organization Name and Address Byrd, Tallamy, MacDonald and Lewis 2921 Telestar Court Falls Church, Virginia 22042		10. Work Unit No. (TRAIS) FCP 35Z K048
		11. Contract or Grant No. DTFH61-84-00103
12. Sponsoring Agency Name and Address Federal Highway Administration Office of Implementation Engineering Highway Operations McLean, Virginia 22101-2296		13. Type of Report and Period Covered Final Report September 84 - September 86
		14. Sponsoring Agency Code

15. Supplementary Notes

Contracting Officer's Technical Representative: Dennis Quarto/Terry D. Halkyard, (HRT-IO)

16. Abstract

This manual provides guidelines for the identification, inspection, and evaluation of fracture critical bridge members. It is a stand alone supplement to the Bridge Inspector's Training Manual 70.

The text provides information on planning, inspecting, and documenting the inspection of fracture critical bridge members (FCMs) as well as explanations regarding the importance of inspecting these members.

17. Key Words Inspection, Fracture Critical, Bridge	18. Distribution Statement This document is available to the U. S. public through the National Technical Information Service; Springfield, Virginia 22161

19. Security Classif. (of this report)	20. Security Classif. (of this page)	21. No. of Pages	22. Price
Unclassified	Unclassified	232	

Form DOT F 1700.7 (8-72)

Reproduction of completed page authorized

METRIC (SI*) CONVERSION FACTORS

APPROXIMATE CONVERSIONS TO SI UNITS

Symbol	When You Know	Multiply By	To Find	Symbol
	LENGTH			
in	inches	2.54	millimetres	mm
ft	feet	0.3048	metres	m
yd	yards	0.914	metres	m
mi	miles	1.61	kilometres	km
	AREA			
in^2	square inches	645.2	millimetres squared	mm^2
ft^2	square feet	0.0929	metres squared	m^2
yd^2	square yards	0.836	metres squared	m^2
mi^2	square miles	2.59	kilometres squared	km^2
ac	acres	0.395	hectares	ha
	MASS (weight)			
oz	ounces	28.35	grams	g
lb	pounds	0.454	kilograms	kg
T	short tons (2000 lb)	0.907	megagrams	Mg
	VOLUME			
fl oz	fluid ounces	29.57	millilitres	mL
gal	gallons	3.785	litres	L
ft^3	cubic feet	0.0328	metres cubed	m^3
yd^3	cubic yards	0.0765	metres cubed	m^3

NOTE: Volumes greater than 1000 L shall be shown in m^3.

	TEMPERATURE (exact)			
°F	Fahrenheit temperature	5/9 (after subtracting 32)	Celsius temperature	°C

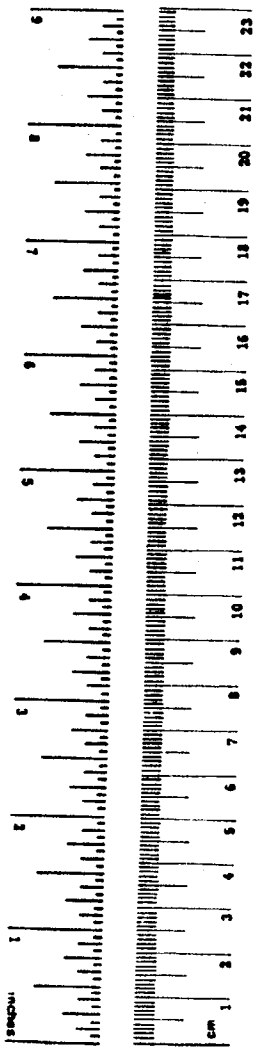

APPROXIMATE CONVERSIONS TO SI UNITS

Symbol	When You Know	Multiply By	To Find	Symbol
	LENGTH			
mm	millimetres	0.039	inches	in
m	metres	3.28	feet	ft
m	metres	1.09	yards	yd
km	kilometres	0.621	miles	mi
	AREA			
mm^2	millimetres squared	0.0016	square inches	in^2
m^2	metres squared	10,764	square feet	ft^2
km^2	kilometres squared	0.39	square miles	mi^2
ha	hectores (10 000 m^2)	2.53	acres	ac
	MASS (weight)			
g	grams	0.0353	ounces	oz
kg	kilograms	2.205	pounds	lb
Mg	megagrams (1 000 kg)	1.103	short tons	T
	VOLUME			
mL	millilitres	0.034	fluid ounces	fl oz
L	litres	0.264	gallons	gal
m^3	metres cubed	35.315	cubic feet	ft^3
m^3	metres cubed	1.308	cubic yards	yd^3
	TEMPERATURE (exact)			
°C	Celsius temperature	9/5 (then add 32)	Fahrenheit temperature	°F

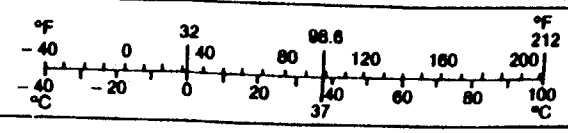

These factors conform to the requirement of FHWA Order 5190.1A.

* SI is the symbol for the International System of Measurements

TABLE OF CONTENTS

CHAPTER 1

THE BRIDGE INSPECTION ORGANIZATION

CHAPTER 2 -

BRIDGE REDUNDANCY AND FRACTURE CRITICAL MEMBERS

CHAPTER 5

THE INSPECTION REPORT

CHAPTER 3

FAILURE MECHANISMS

CHAPTER 4

INSPECTION PROCEDURES

INTRODUCTION

In the nineteenth century, almost all bridges were privately owned by the railroads. No public laws existed concerning bridge inspection or the regulation of bridge builders or material manufacturers. Private designers set their own safety factors which tended to be extremely low so that they could market cheap bridges. Bridge collapses were frequent, and it was not uncommon for 60 to 80 people to die in each collapse. We are fortunate to live in safer times. On the average, 150 bridges collapse each year resulting in the deaths of 12 people. Still, despite improvements, catastrophic bridge failures like that of the bridge over the Mianus River in Connecticut still occur occasionally. The concern generated by these collapses are the reason for this manual.

This manual is intended for use by people with some previous bridge inspector training and experience. The nomenclature used throughout the manual is similar to that included in the Bridge Inspector Training Manual 70 and familiarity with that manual is a sufficient background for this manual.

According to the AASHTO definition, fracture critical members or member components are tension members or tension components of a bridge whose failure would be expected to result in the collapse of the bridge. Due to this danger of collapse, the close inspection of fracture critical bridge members is especially important for the following reasons:

- The potential for loss of life can be staggering. Forty-six persons died in the collapse of the Silver Bridge in 1967.

- Subsequent litigations can result from loss of lives.

- The bridge owner loses the capital investment in the bridge and must now fund a repair/replacement project.

- The public must detour the structure, often affecting the economic livelihood of neighboring communities.

- Public confidence in those responsible for inspecting bridges is shaken.

The purpose of this manual is to enhance the training of bridge inspectors so that they understand the critical components of a bridge structure and recognize the signs of impending trouble in these critical members. This manual is intended to be used as a guideline for bridge inspectors active in the National Bridge Inspection Standard (NBIS) routine two-year cycle inspection program. It is not intended that this manual stand alone, but that it supplement the Federal Highway Administration's "Bridge Inspector's Training Manual 70." Chapter 1 of this Fracture Critical Manual outlines the qualifications, duties, responsibilities, skills, and equipment necessary to accomplish a detailed inspection of fracture critical members. Chapter 2 provides a simplified explanation of structural analysis of beams and trusses,

and discusses various nonredundant framing types. Chapter 3 explains the fatigue mechanism and other modes of failure. Chapter 4 deals with inspections and testing procedures. Chapter 5 discusses evaluation, documentation, and reporting procedures. The manual also contains an annotated bibliography of related literature.

CHAPTER 1

THE BRIDGE INSPECTION ORGANIZATION

Section 1. THE IMPORTANCE OF THE INSPECTION PROGRAM

1-1.1 Public Safety

Public safety is a major responsibility of transportation agencies. This responsibility was emphasized legislatively for existing bridges with the enactment of the National Bridge Inspection Standards (NBIS) as part of the Federal-Aid Highway Act of 1968. This legislation was a result of the Silver Bridge disaster a year earlier when the fracture of an eyebar produced an almost instantaneous bridge collapse in which 46 motorists were killed. The Inspection Standards define procedures for bridge inventory and inspection and suggests inspection frequencies and qualifications of personnel. The Federal Highway Administration (FHWA) of the U.S. Department of Transportation administers the inspection program. State and local transportaton agencies have developed their own bridge inspection programs that conform to the national guidelines. The primary purpose of the inspection program is to ensure that highway bridges are safe for public use.

In June 1983 national attention was again focused on bridge inspection programs with the collapse of a portion of the Mianus River Bridge in Connecticut. This collapse is shown in Figure 1. The initial failure of

FIGURE 1

MIANUS RIVER BRIDGE

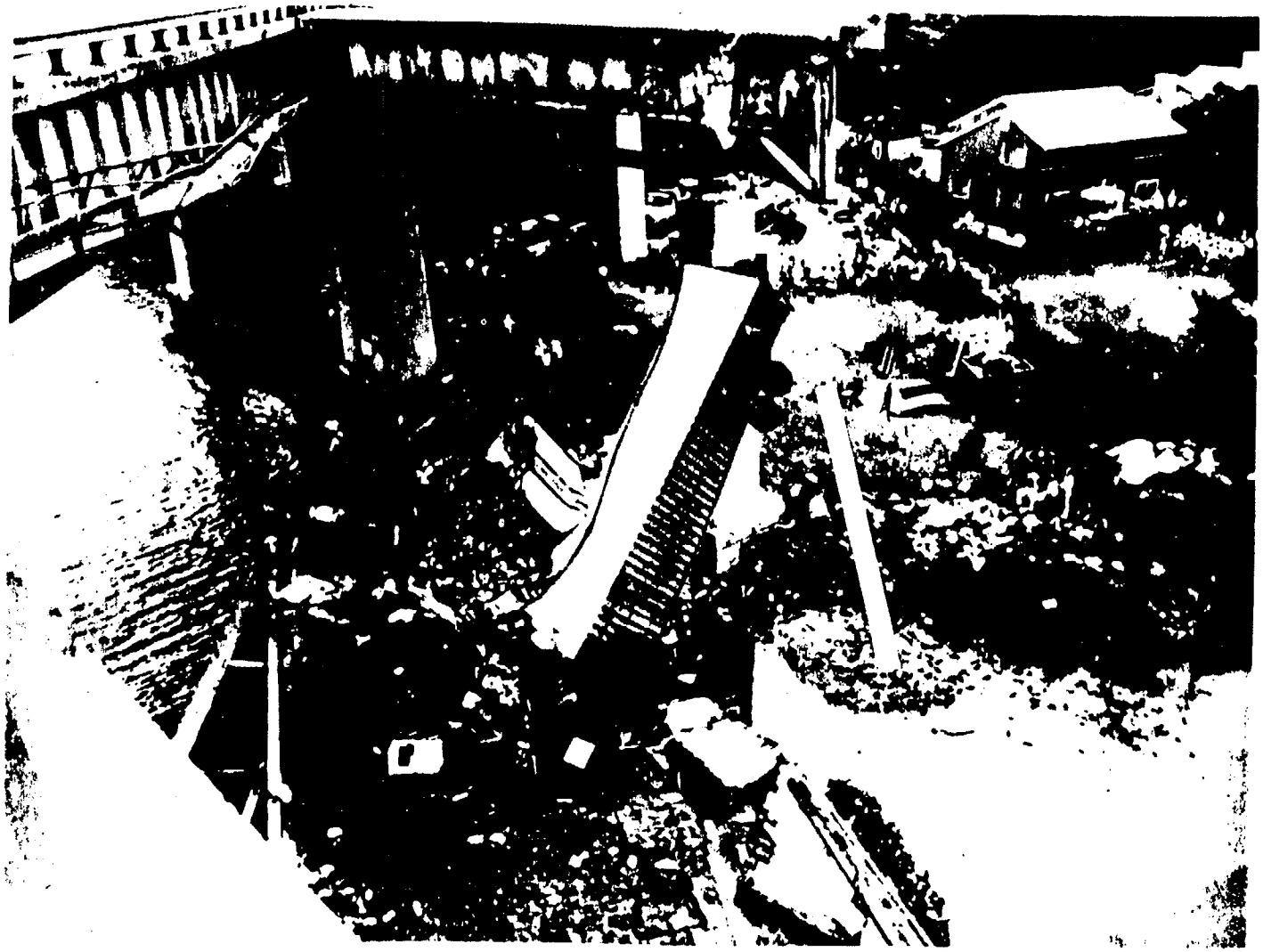

Collapse of bridge in Connecticut

one of four pin and hanger assemblies supporting a suspended span resulted in the collapse of the span. As a result of this tragedy, an emergency order directing all highway agencies to reinspect their bridges containing critical details similar to those in the Mianus River Bridge was issued by the FHWA. Plans were also initiated to develop a manual detailing the inspection procedures for Fracture Critical Members (FCMs) in existing bridges. The primary purposes of the manual were to assist inspectors in identifying such members and to provide guidelines regarding the appropriate special attention FCMs should receive during the inspection process.

1-1.2 Agency Liability

Bridges are normally taken for granted by the public and are crossed without notice or concern. Only when problems occur is there a reaction. A road closed because of an unsafe structure brings a predictably loud reaction, and the closed bridge quickly becomes the most important bridge in the area. Questions are then asked such as: Why was the condition permitted to deteriorate? Who is responsible?

Our society has recently become more litigious, consequently public agencies are increasingly vulnerable to liability suits arising from damages related to alleged civil wrong or injury. This type of suit is known as a tort litigation, and an agency faced with such a suit is often placed in the position of defending its entire program. Administrators must explain why resources were used in one place and not in another. The decision-making and quality control processes are scrutinized; and qualifications, past

performance and work habits of individuals are placed under microscopic investigation. Litigation awards made to successful plaintiffs often come from the transportation budget of the highway agency, thereby draining important resources from other transportation projects.

Careful inspection with appropriate procedures and clear documentation is required for a successful bridge inspection program to assure that the briges are safe. These same procedures will serve to protect the inspector and the inspection agency, and to preserve public confidence in the inspection program.

1-1.3 The Nature of Bridge Inspection

Highway bridges have a single function. They facilitate vehicular transportation over an obstruction. Compared to other structures they may look relatively uncomplicated, and it is not difficult to deduce generally how live load is transferred from the deck through the structural elements into the foundation. Yet there is more emphasis placed on monitoring the condition of bridges than on most other structures for the following reasons.

a. Damage Due to Exposure. Bridge elements are relatively unprotected from the environment. Bridge members are exposed to water, debris, and contaminants such as deicing salts; and they must resist freeze/thaw damage and accommodate significant thermal movement. Bridge members are also very vulnerable to corrosion and other exposure associated damage which can contribute to an unsafe condition.

b. Damage Due to Live Load. Bridges are subjected to a wide range of vehicular loads. As vehicles cross, the live loads produce changing stresses which cause a wide range of strain or deformation in the members. The impact of a vehicle also contributes to the changing stresses. The relatively large range of repeated elastic strain or deformation places greater demands on the material properties of critical members and increases the probability of damage. This damage is called fatigue, and it may produce cracks and potential failure of structural components. Other damage can result from live load which exceeds the design or posted values, and from collision.

c. Other Problems. All aspects of bridge inspection are treated in the "Bridge Inspector's Training Manual." Problems such as foundation settlement and hydraulic scour or undermining contribute to the need for periodic inspections. The inspector has the responsibility of thoroughly and accurately reporting the condition of the bridge with emphasis on problems with the potential to adversely affect safety. To effectively meet this responsibility requires a general understanding of bridges and the factors that influence their condition combined with specific knowledge of the structure to be inspected. Other aspects of the bridge inspection process should not be neglected while concentrating on fracture critical members.

1-1.4 Detection of Bridge Deficiencies

Unless the inspector and/or his supervisor understand where to look and

what to look for when inspecting bridges, they will be ineffective. Deterioration typically occurs at specific locations related to deck drainage, debris accumulation, and exposure. Cracks initiate at stress concentrations such as certain framing details and fabrication defects. Chapters 2, 3, and 4 of this manual contain information helpful in locating problems on members with potentially high risk modes of failure.

1-1.5 Evaluation of Bridge Deficiencies

To evaluate the way in which a deficiency affects safety often requires an appraisal of its significance on the structural stability of the bridge. The following questions should be considered:

(1) Is the defect located on a critical member of the bridge? (That member controlling the load capacity)

(2) Is the defect located at a critical point on the member? (Such as the point of maximum moment in a beam)

(3) If the member fails, will it cause the bridge to collapse?

(4) Will other load-carrying members provide adequate resistance to support the bridge?

(5) Should the bridge be closed to traffic to prevent any possible catastrophe?

Section 2. QUALIFICATIONS AND ORGANIZATION FOR INSPECTION OF FRACTURE CRITICAL MEMBERS

1-2.1 Unit Leader

The National Bridge Inspection Standards provide minimum qualifications for two levels of responsibility. The first, or senior, level is the individual in charge of the organizational unit.

The National Bridge Inspection Standards list the following qualifications for the position of unit leader. A unit leader should:

(1) Be a registered professional engineer; or

(2) Be qualified for registration as a professional engineer under the laws of the State; or

(3) Have a minimum of 10 years experience in bridge inspection assignments in a responsible capacity and have completed a comprehensive training course based on the "Bridge Inspector's Training Manual," which has been developed by a joint Federal-State task force.

In a small agency such as a town or county there may be only one inspection team and the unit leader will likely have other responsibilities in addition to managing the bridge inspection program. A large state organization may be subdivided into many inspection units or the organizational unit leader may have a staff of people to assist with the required duties. Ideally, the position requires a general understanding of

all aspects of bridge engineering including design, load rating, new construction, rehabilitation, and maintenance. The unit leader provides day-to-day supervision and is available to team leaders to evaluate problems. Good judgement is important to determine the urgency of problems and to implement the necessary short-term remedial actions to protect the safety of the public.

The Unit Leader should determine which bridges have FCMs, and locate and delineate these members for the inspection team.

1-2.2 Team Leader

The second level of responsibility described in the Standards is the Team Leader who is in charge of a bridge inspection team. The NBIS lists the qualifications of a Team Leader as:

(1) Have the qualifications specified for the Unit Leader or

(2) Have a minimum of 5 years experience in bridge inspection assignments in a responsible capacity and have completed a comprehensive training course based on the "Bridge Inspector's Training Manual 70."

There should be at least one team leader at the bridge during each FCM inspection. Normally, the inspection team is composed of two or more people. The qualifications of the individuals who assist the team leader

vary depending on the organization. It is the responsibility of the team leader to decide the capability of individual team members and delegate responsibilities accordingly. For the purpose of this manual, the "inspector" is either the team leader or another team member under the direction and in the presence of the team leader.

The "Bridge Inspector's Training Manual 70" also describes the training, education, experience, physical agility, skills, attitude, and motivation desirable for the inspector. In addition to these qualifications, the Inspector should have advanced bridge inspection training with an emphasis on fatigue and fracture critical members.

The quality and efficiency of the inspection is influenced by the inspector's knowledge of how the bridge works and what controls its strength and stability. An understanding of material characteristics and construction procedures combined with skills in organizing data and technical report writing are valuable. An engineering degree or two-year engineering technology degree is desirable. However, motivated individuals with high school educations and inquisitive minds can apply themselves and become excellent inspectors.

1-2.3 Physical & Mental Characteristics

Proper inspection of fracture critical members is impossible without up-close, hands-on access. To accomplish this often requires considerable physical agility and strength. An extension ladder is commonly used to

inspect bridges less than 30 feet high as shown in Figure 2. On a long bridge, an inspector may need to work for days erecting, positioning, and climbing this long awkward ladder to examine fracture critical members. Although the terrain may be rough, steep, and slippery, the job demands that a person be physically able to get in position to properly inspect the structure.

Someone not accustomed to working at heights may be uncomfortable inspecting the underside of a tall bridge. This normally does not present a serious problem, particularly when the new inspector is permitted to increase the height at which he works in stages. A respect for high places should be encouraged. It is necessary that the inspector be physically capable of securely positioning himself up-close to all exposed parts of the structure and sufficiently comfortable in these positions to think clearly and perform a thorough inspection. Figure 3 shows a bridge inspector at work in a demanding position.

It may be necessary to inspect hundreds of members on a single bridge for deterioration cracks, flaws, and other structural damage. Motivation and self-discipline are necessary to ensure that each member receives the proper attention. Traits such as diligence, thoroughness, and attention-to-detail are necessary.

By definition, to inspect is to view closely or scrutinize. In most organizations, the bridge inspector is more than an observer or reporter. The job entails evaluating defects, as the defect that is observed is often

FIGURE 2
"HANDS ON BRIDGE INSPECTION"

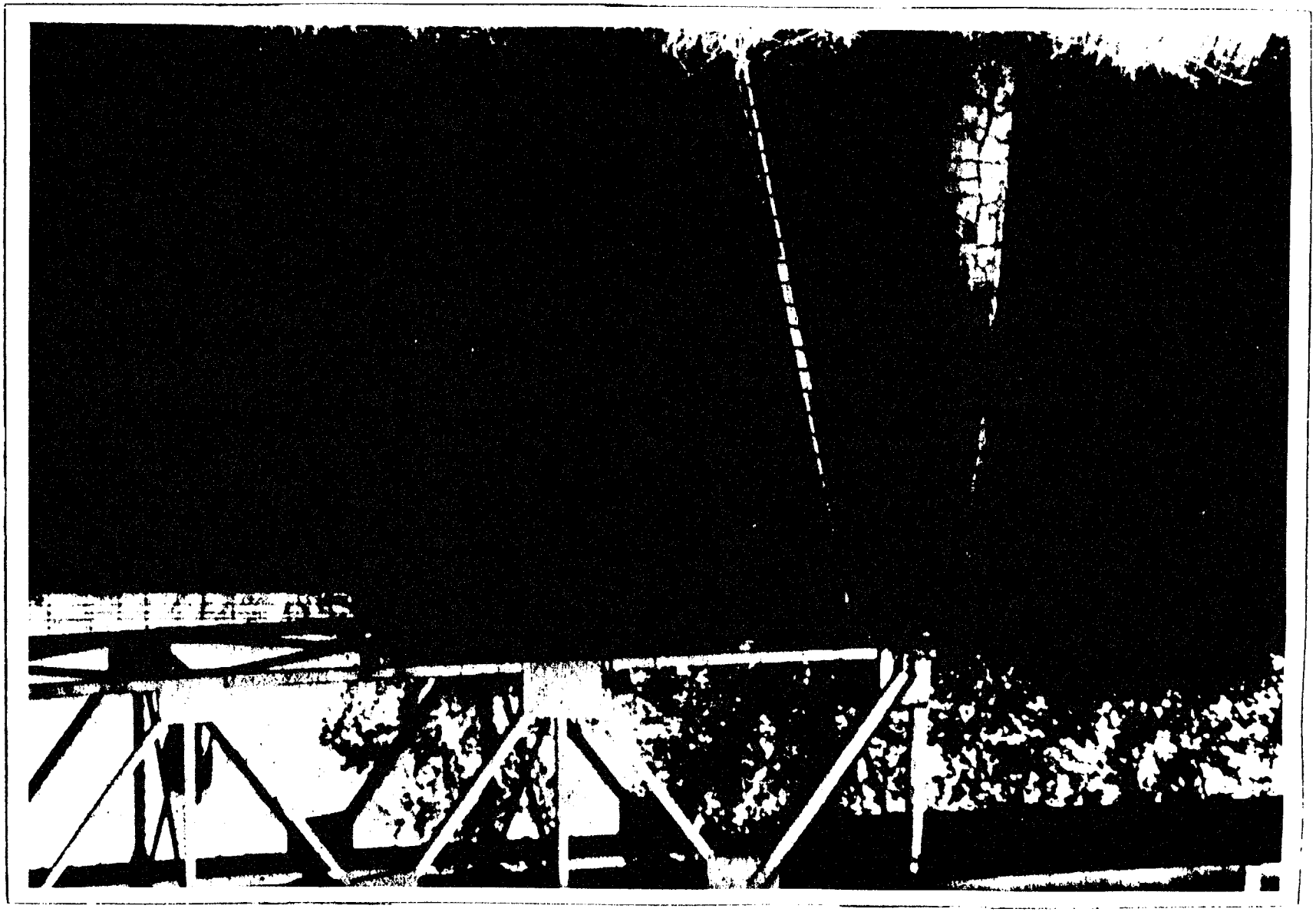

Bridge Inspector using extension ladder

FIGURE 3 BEARING INSPECTION

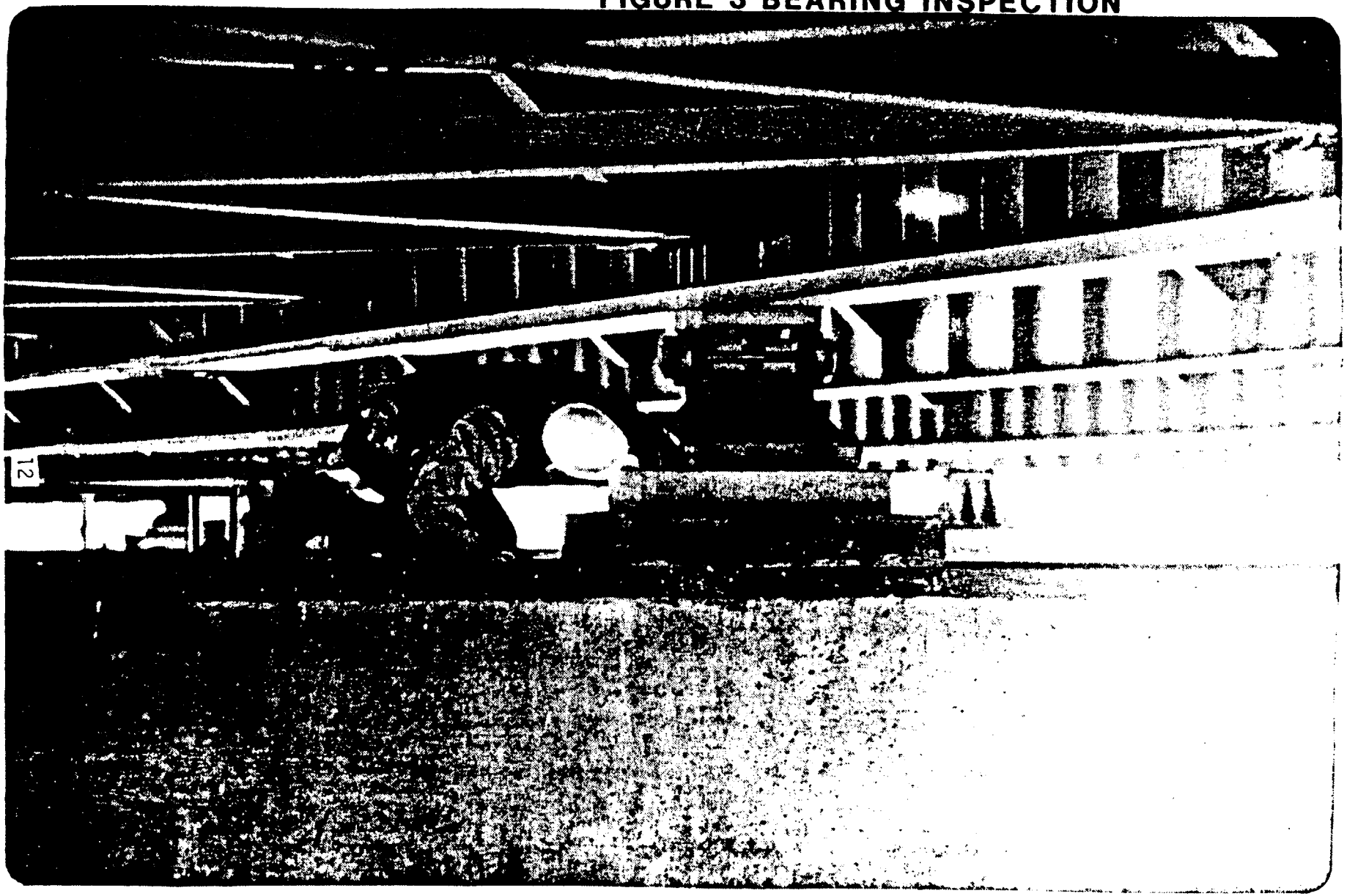

Normal position for Bridge Inspector

only a symptom. The appropriate response to the defect must then be recommended. When inspection personnel understand the severity of the consequences if a FCM inspection is not conducted properly, they will realize the seriousness of a thorough bridge inspection procedure.

Section 3. PLANNING AND QUALITY CONTROL OF FCM INSPECTION

1-3.1 General

Planning and quality control are important parts of a FCM inspection. These are normally considered supervisory functions and are the responsibility of the individual in charge of the organizational unit. Much of the planning and quality controls are, however, actually often done by others, including the inspector, under the direction of the unit leader. The unit leaders should designate bridges with FCMs and locate the FCM on the plans or by description for the inspection teams.

1-3.2 Determine Resource Requirements

The inspection of a bridge containing fracture critical members begins with planning to ensure that necessary resources in terms of trained staff and equipment are available. A realistic assessment must be made to determine resource requirements for the FCM inspection as inspection teams require adequate staff and equipment. To achieve a balance in these factors involves an evaluation of the type and size of the bridges and an estimate of the time and equipment required to make the appropriate inspection. The

cost and availability of the major equipment such as self-propelled hydraulic manlifts, or truck-mounted under-deck inspection units ("snoopers"), as shown in Figure 4, should be considered. Adequate funding is often a result of detailed requests, proper justification and a history of efficient utilization. The inspection of FCMs should receive the highest priority in any bridge inspection program.

1-3.3 Identify Bridges

The inspection team should realize the importance of recognizing which bridges contain fracture critical members and know where those fracture critical members are within the bridge. Having established this, the inspection team can then proceed with proper planning and eventual inspection. It may be necessary to review plans and sketches for certain structures to get this information; and once ascertained, the location of fracture critical members and member components should be made a permanent part of the inventory records. Fracture critical members should be identified by the individual incharge.

1-3.4 Plan FCM Inspections

The inspection team should be prepared to make the FCM inspection. Planning involves having the appropriate equipment available to permit a hands-on inspection. Factors such as the location, capacity, traffic, roadway width, height, and water depth must be considered in selecting access equipment. The special equipment may also require more elaborate

FIGURE 4 SNOOPER USE

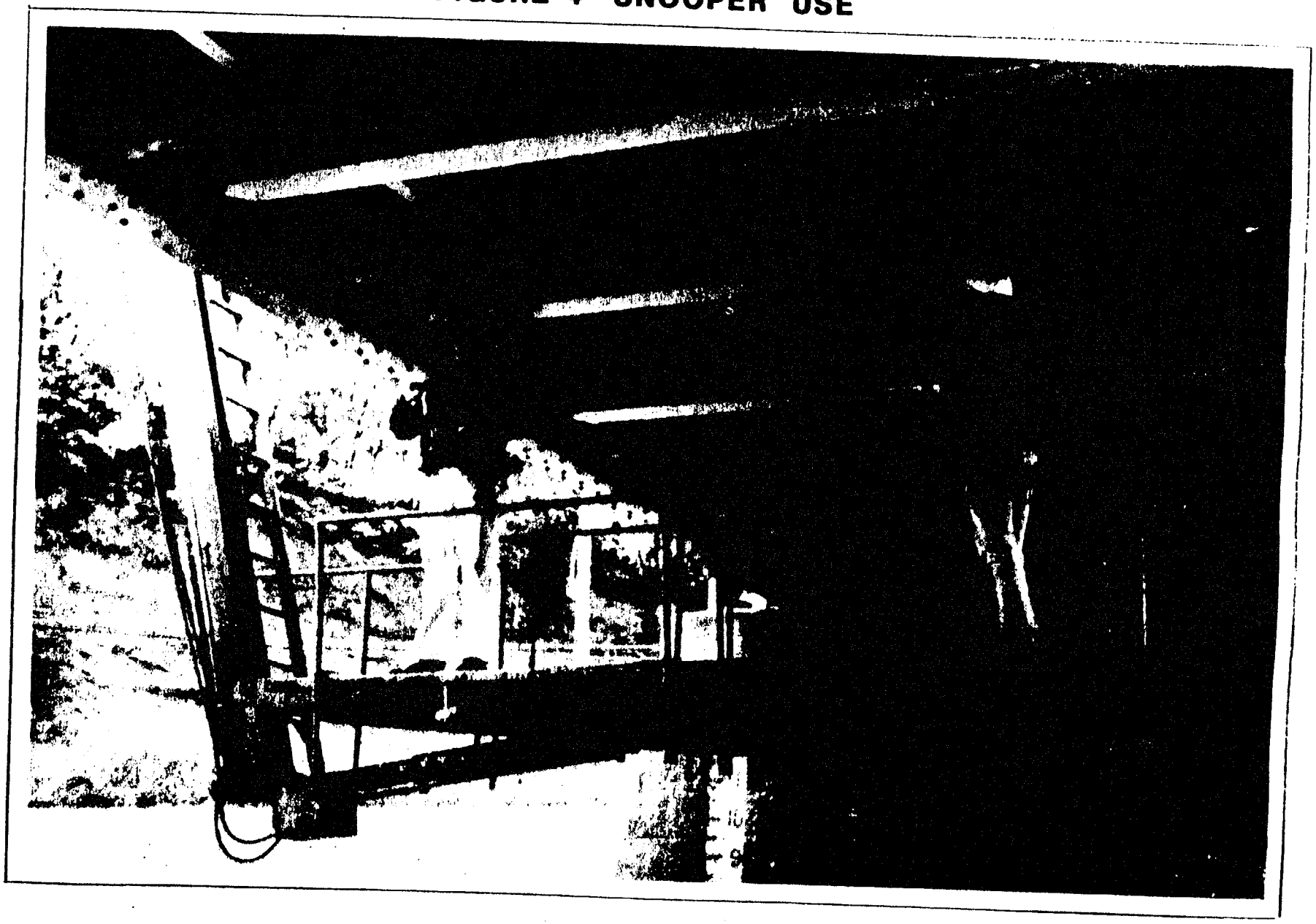

Using equipment for underdeck inspection

traffic control provisions. Staging, traffic control, and special attention to FCMs must be considered in estimating personnel requirements to inspect a bridge.

Problems are more likely to exist on some bridges with fracture critical members than on others. For example, some FCMs may have details that are highly susceptible to fatigue damage or others may be in poor condition due to corrosion. Repairs and modifications influence the likelihood of problems. Stress range and fatigue are discussed in Chapter 3. The inspector should appreciate that age and heavy traffic, particularly trucks, compound problems. The inspection team is better able to recognize subtle damage if they have age and traffic information available during the inspection.

It is important that adequate time be allocated for the inspection of bridges with FCMs. Certain steps are necessary to accomplish this objective. Included among these steps are:

(1) Bridges with FCMs are identified by the engineer.

(2) An inspection plan is formulated to ensure each FCM receives proper evaluation.

(3) The plan includes the equipment, inspection technique, and staffing that must be provided the inspection team.

(4) The plan is discussed with the inspector to ensure that the priorities are understood.

(5) Quality control checks are made by the team leader during and after the inspection to ensure that it is performed in accordance with the plan.

While these steps may seem to require significant extra time, once the inspection plans are implemented, they will require only a review at subsequent inspection cycles. The plan should be revised as necessary to reflect modifications in a bridge or changes in its condition. It is important that critical areas and details are monitored closely to evaluate rates of change and predict the need for remedial action.

1-3.5 Follow-Up Procedures

Certain bridges containing FCMs will require additional evaluation to supplement the regular inspection. An example of this is the need for detailed structural analysis calculations to determine the reduced capacity of a damaged member. Another example is a need to conduct sophisticated testing procedures as described in Chapter 4. It may be helpful to seek assistance from a specialist when it is necessary to evaluate a suspicious flaw discovered during the inspection.

Serious problems in FCMs must be addressed immediately. The system should include a method for the inspector to implement the closing of a bridge with FCMs on-the-spot if the condition warrants by consulting with his engineering supervisor and arranging for necessary police action. For less serious problems requiring repair or retrofit, the appropriate people

should be advised to facilitate the work in a timely manner. An unsafe situation should not be allowed to continue because of a backlog of paperwork.

1-3.6 Quality Control

Training manuals and instructions are useful in providing performance guidelines. An integrated quality control program is important to ensure that the FCMs are thoroughly inspected. The thoroughness of an inspection cannot be determined by the appearance of the inspection report. Hands-on involvement by the unit leader is necessary to maintain the proper level of inspection, to monitor and train inspectors, and to make independent checks of condition appraisals. This involvement of the unit leader also provides an opportunity to ensure that the inspectors understand the inspection procedures and to reinforce the importance of the inspection.

1-3.7 Quality Versus Quantity

It is possible for an inspector to have in-depth knowledge and ability and still not have enough time to conduct a thorough inspection. Although rates of production cannot be ignored, bridge inspectors should not have to place quantity of inspections ahead of quality. The likelihood of overlooking serious problems can be proportionally increased when inspection teams meet quotas by reducing the thoroughness of the inspection. It may be possible to improve production by improved planning or efficiency.

1-3.8 Periodic Inspections

In many jurisdictions inspectors are very familiar with the bridges in their area of responsibility. Many have inspected the same structures since the biennial inspection program began in the early seventies. In organizations where the report is reviewed not only to flag unsafe bridges, but to plan and budget future maintenance, the inspectors develop a long-term attitude toward the condition of their bridges. Inspection findings and recommendations are directed at improving the overall condition and maximizing service life. The inspector makes a vital contribution to the bridge maintenance, rehabilitation, and replacement decision-making process by his compilation of clear and accurate reports.

The disadvantage of inspecting the same bridges year after year is that they become "old friends." Old friends that are seen reguarly change slowly, without notice. The alert, scrutinizing attitude that characterized the initial inspection is difficult to maintain. Any tendency not to set up the ladder or launch the boat to check a critical member that has been inspected several times in the past must be resisted. It is true that some problems develop slowly, but others occur suddenly and advance rapidly. It is important that every inspection of fracture critical members be intensive and thorough.

CHAPTER 2

BRIDGE REDUNDANCY AND FRACTURE CRITICAL MEMBERS

Section 1. DEFINITIONS

2-1.1 Fracture Critical Members

The AASHTO Guide Specification for Fracture Critical Bridge Members states that "Fracture Critical Members or member components (FCMs) are tension members or tension components of members whose failure would be expected to result in collapse of the bridge." To qualify as a FCM, the member or components of the member must be in tension and there must not be any other member or system of members which will serve the functions of the member in question should it fail. The alternate systems or members represent redundancy. Redundancy in bridge framing systems and of tension members, along with the necessary definitions are discussed in the following sections.

2-1.2 Framing Systems

Some knowledge and understanding of the structural framing system is necessary to define and locate fracture critical members. Additional information on this subject is included in Chapter 2 of the "Bridge Inspector's Training Manual 70."

a. Simple Spans. Simple spans consist of a superstructure span having a single unrestrained bearing at each end. The supports must be such that they allow rotation as the span flexes under load. Ordinarily, at least one support is attached in a way that keeps the span from moving longitudinally. Figure 5a is a pictorial presentation of a simple span. Simple spans can be located within other systems as shown in Figure 5c. The span arrangements can be used for either trusses or girders as illustrated in Figure 8.

b. Continuous Support. Spans are considered continuous when one continuous piece crosses three or more supports. Figure 5b shows a two-span continuous structure. Note that the supports at the ends of the continuous units are similar to those at the ends of a simple span. However, because the member is continuous over the center support the magnitude of the member rotation is restricted in the area adjacent to the pier. A bridge may be continuous over many supports with similar rotational characteristics over each interior support.

c. Cantilever and Suspended Spans. Sometimes it is advantageous from a structural standpoint to continue a span over the pier and terminate it near the pier with a short cantilever. This cantilever is ordinarily used to support or "suspend" the end of an adjacent span. This arrangement is shown in Figure 5c. The other end of the suspended span may in some cases be supported by another cantilever or it may rest on an ordinary simple support.

FIGURE 5
BENDING

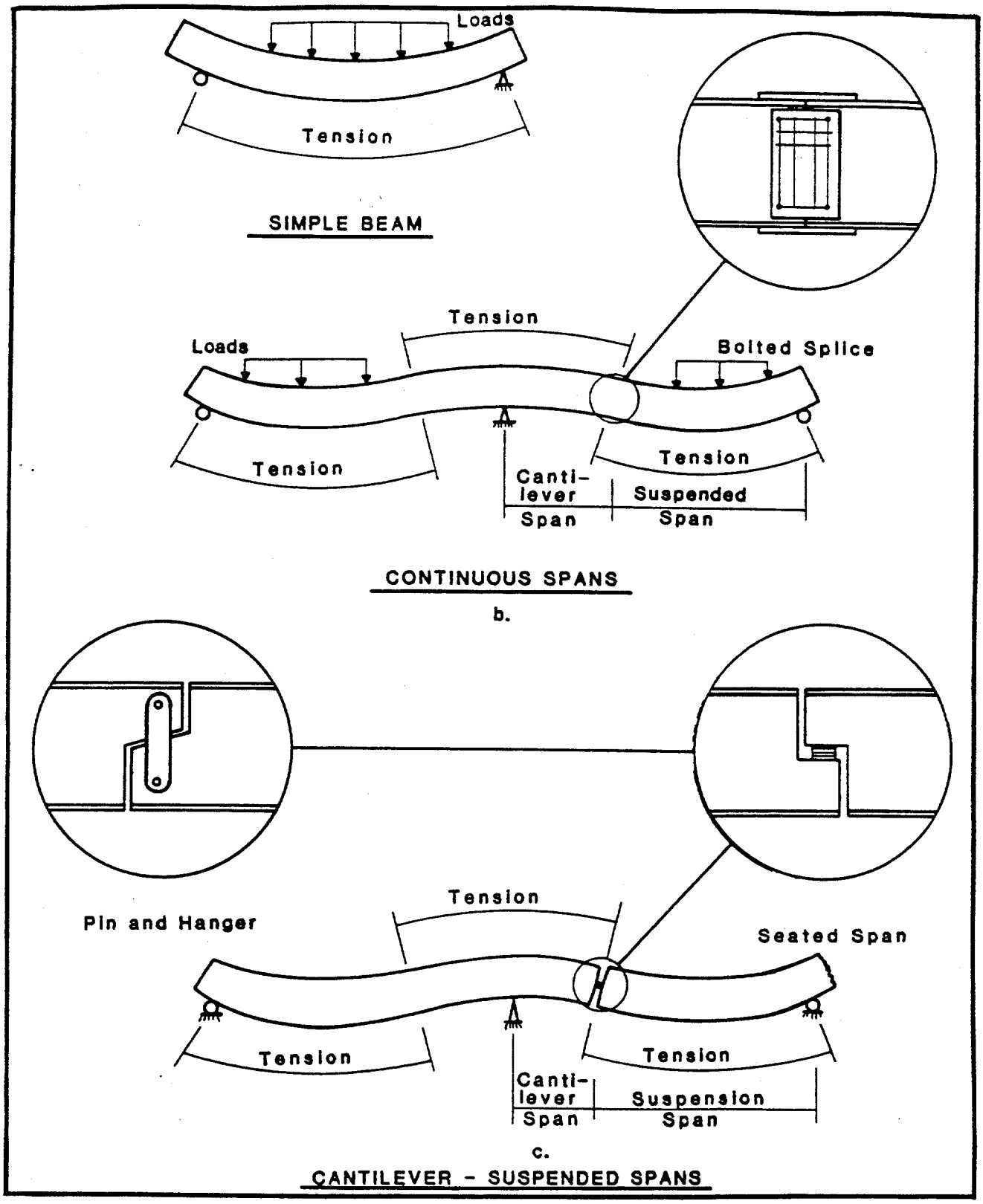

d. Rigid Frames. Rigid frames are frequently used as transverse supports in steel construction, and occasionally used as longitudinal spans. A rigid frame bent example is shown in Figure 6. The term "rigid" is derived from the manner of construction or fabrication which does not allow relative rotation between the members at a joint. A rigid frame may be rigidly attached at the base (fixed) or it may be simply supported.

2-1.3 Stresses

Those stresses which tend to stretch the member are termed tensile stresses. If a member develops a crack in an area subject to tensile stress, the faces of the crack are pulled further apart as shown in Figure 7. Conversely, compressive stresses attempt to shorten the member. Compression is the primary force which acts in columns. A member with a crack subject to compression will tend to have the faces of the crack forced together. Tensile stresses are caused in bridge members and components through bending and/or axial action of the bridge under load.

a. Bending. External loads on a simply supported beam create bending which causes a beam to deflect as shown in Figure 5.a. Tensile stresses develop in the lower portion of the beam in simple spans (Figure 5.a) and in the top flange over supports for continuous spans (Figure 5.b). Simple beams are said to be in positive bending, while the portion of continuous spans over the middle support are said to be in negative bending. In positive bending regions, the bottom flange and the lower portion of the web are in tension as illustrated in Figure 5.a. In negative bending regions,

FIGURE 6
RIGID FRAME BENT

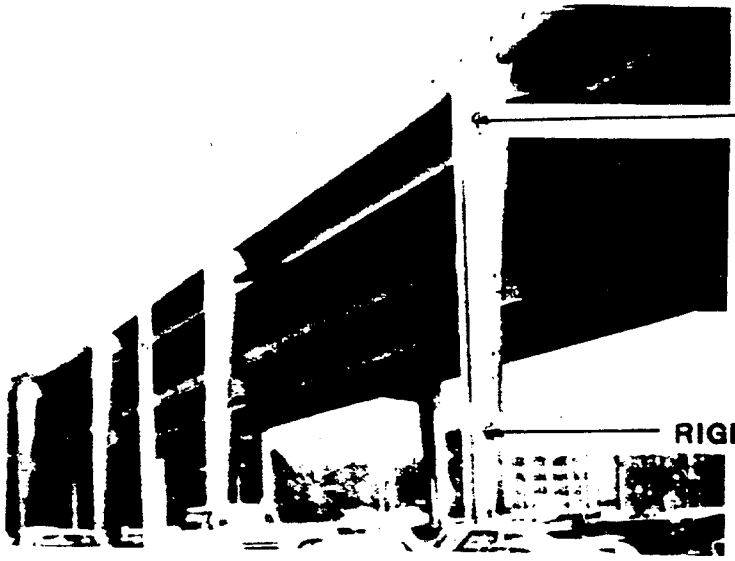

Fort Duquesne Bridge, Pennsylvania

FIGURE 7
TENSION STRESS

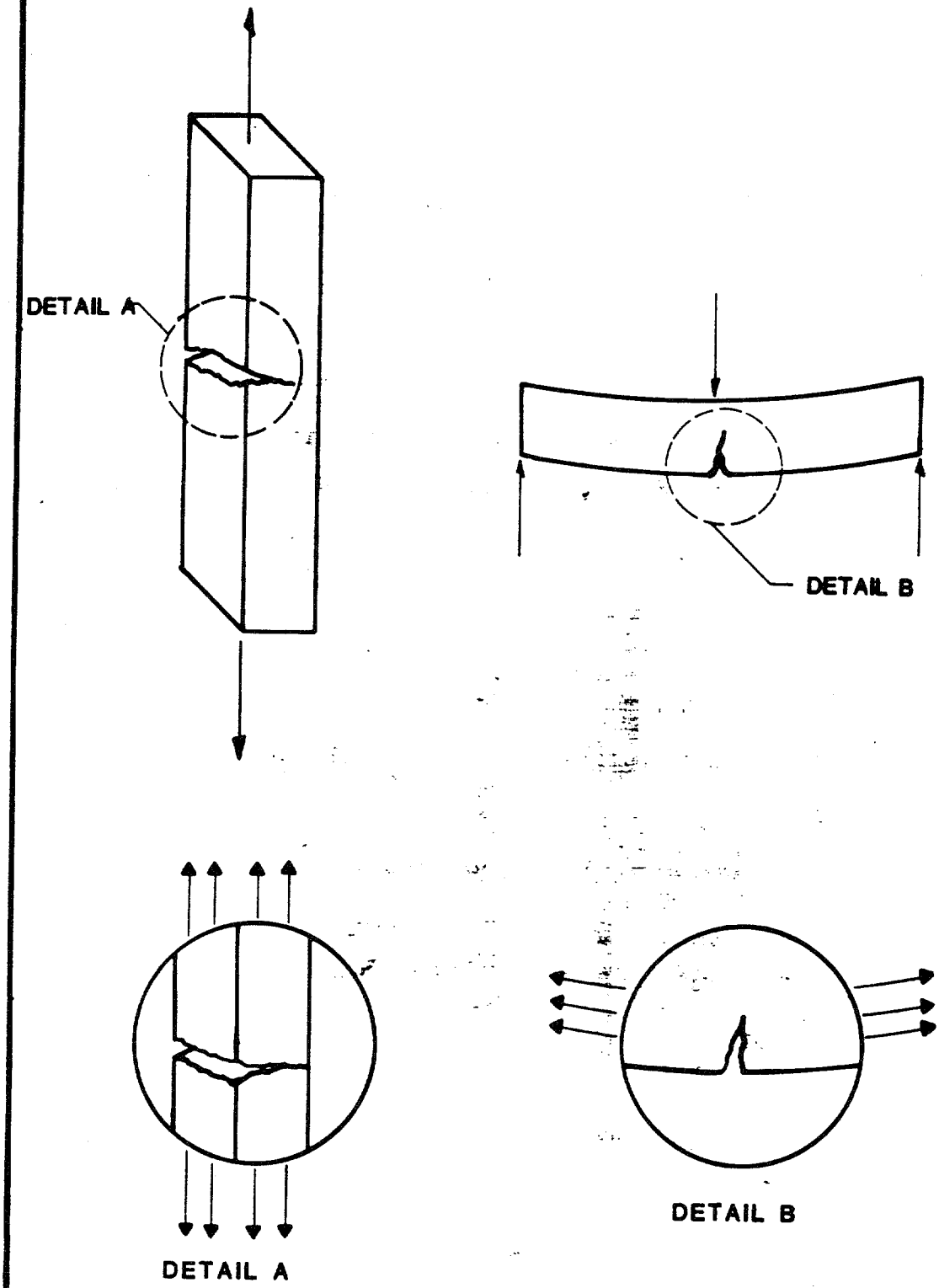

Cracks being pulled open by tensile forces.

the top flange and the upper portion of the web are in tension as shown in Figure 5.b.

b. Axial. Trusses function in a manner similar to beams. Bending causes the truss to deflect like those shown in Figure 8. In simple span trusses, positive bending causes the bottom chord to be in tension. In continuous trusses, negative bending over the piers causes the top chord to be in tension and positive bending at mid-spans causes the bottom chord to be in tension. Verticals and diagonals may or may not be in tension as explained later in this chapter. The tension tie in a tied-arch bridge is also an example of axial tension, although it may be subject to bending stresses depending on the framing arrangement.

2-1.4 Redundancy

With respect to bridge structures redundancy means that should a member or element fail, the load previously carried by the failed member will be redistributed to other members or elements which have capacity to temporarily carry additional load and collapse of the structure may be avoided. Redundancy in this manual is divided into three parts as further described below: Load Path Redundancy, Structural Redundancy, and Internal Redundancy.

a. Load Path Redundancy. Load path redundancy refers to the number of supporting elements, usually parallel, such as girders or trusses. For a structure to be nonredundant, it must have two or less load paths. A

FIGURE 8

BENDING IN TRUSSES

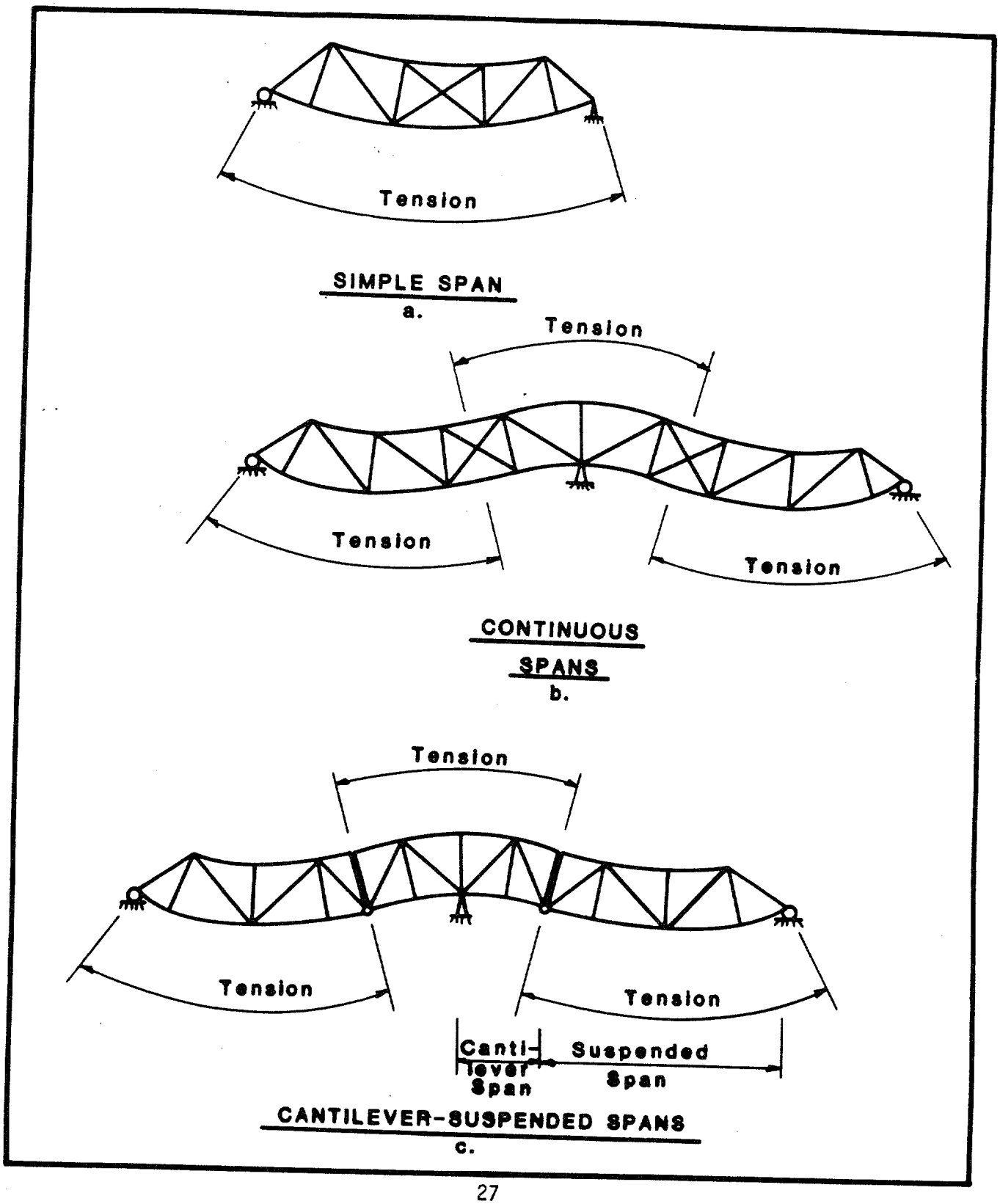

framing system which uses only two beams or girders as shown in Figure 9 is nonredundant. Failure of one girder will usually result in the collapse of the span, hence the girder is considered to be nonredundant and fracture critical. A multiple load path structure is shown in Figure 10. There would be no FCMs in this structure.

b. Structural Redundancy. For the purpose of this manual structural redundancy is defined as that redundancy which exists as a result of the continuity within the load path. Any statically indeterminate structure may be said to be redundant. For example, a continuous two-span bridge has structural redundancy. In the interest of conservatism, AASHTO chooses to neglect structural redundancy and classify all two girder bridges as nonredundant (AASHTO, Section 10.3.1). The current viewpoint of bridge experts is to accept continuous spans as redundant except for the end spans, where the development of a fracture would cause two hinges which might be unstable.

c. Internal Redundancy. With internal redundancy the failure of one element will not result in the failure of the other elements of the member. The key difference between members which have internal redundancy and those which do not is the potential for movement between the elements. Plate girders, such as the one shown in Figure 11.a, which are fabricated by riveting or bolting have internal redundancy because the plates and shapes are independent elements. Cracks which develop in one element do not spread to other elements. Conversely, plate girders fabricated by welding as shown in Figure 11.b are not internally redundant and once a crack starts to

FIGURE 9
TWO GIRDER SYSTEM

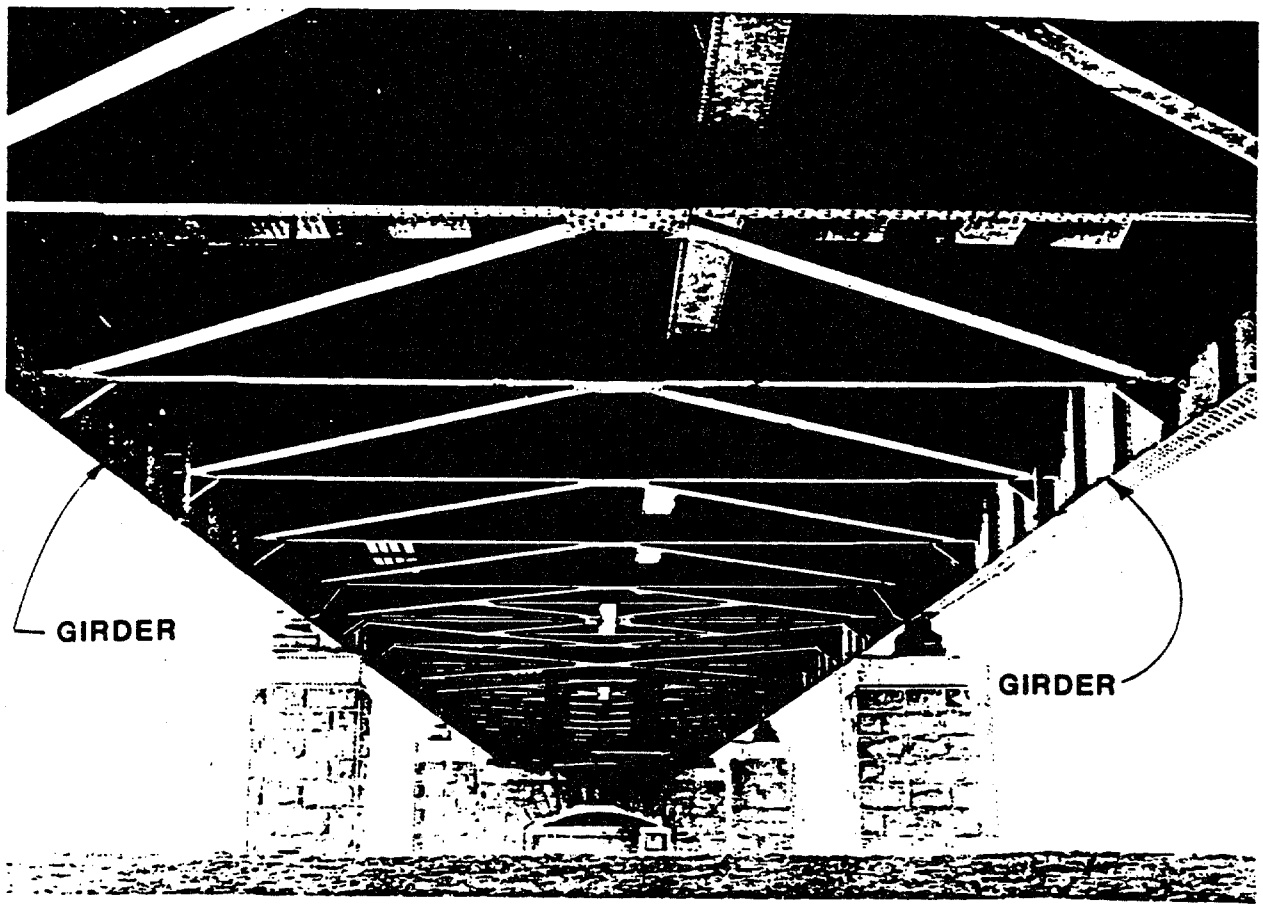

Lateral bracing system on steel two-girder bridge.

SOURCE: FHWA, 1969.

FIGURE 10
MULTI BEAM BRIDGE

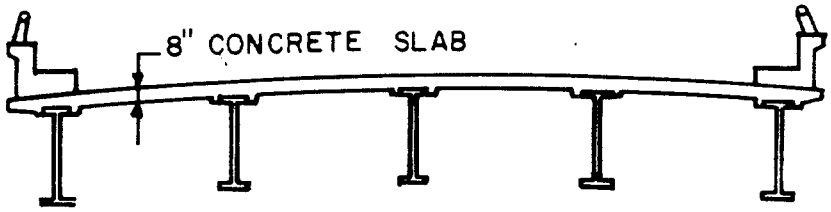

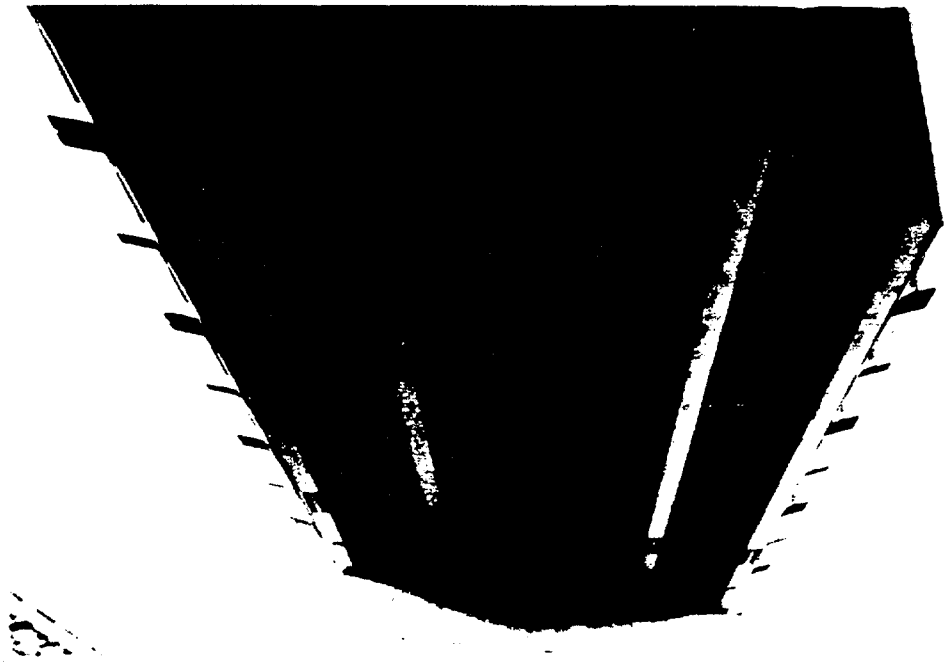

Load Path Redundancy

FIGURE 11
PLATE GIRDER

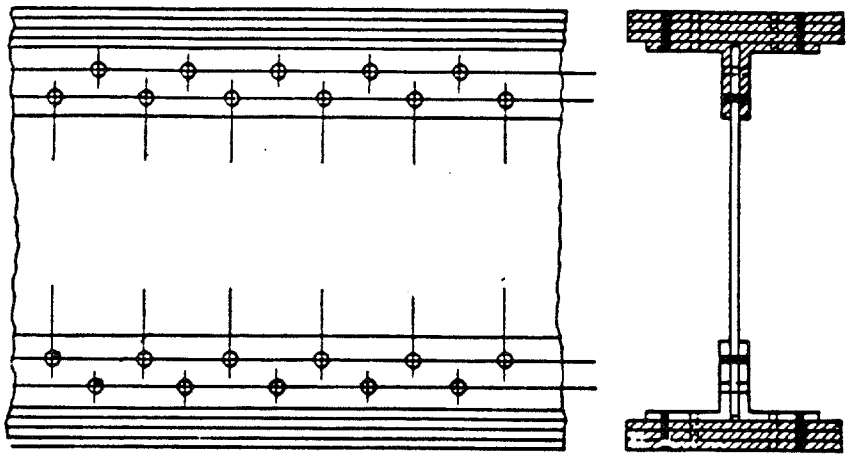

a.

Riveted Girder

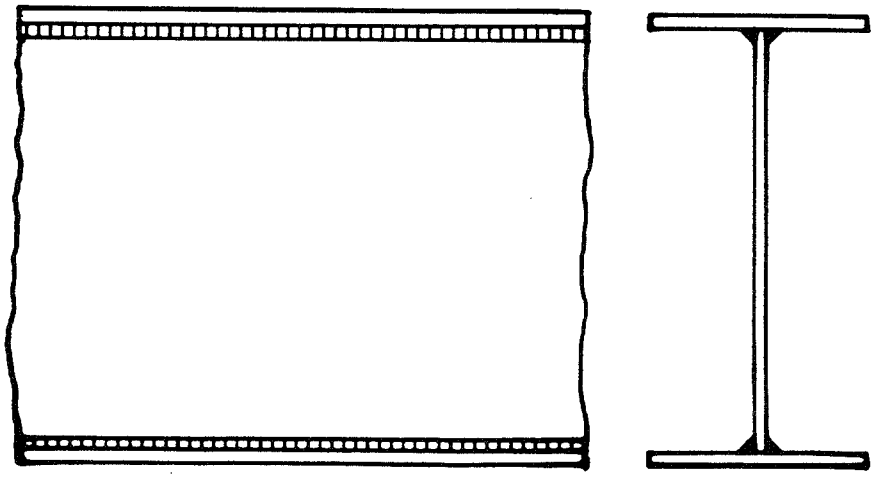

b.

Welded Girder

propagate, it may pass from piece to piece with no distinction unless the steel has sufficient toughness to arrest the crack. Internal redundancy is not ordinarily considered in determining whether a member is fracture critical, but may be considered as affecting the degree of criticality.

Section 2. EXAMPLES

2-2.1 Two-Girder System (or Single Box Girder)

a. Simple Spans. A two-girder framing system is shown in Figure 9. It is composed of two longitudinal girders which span between piers with transverse floorbeams between the girders. Floorbeams support longitudinal stringers.

The failure of one girder may cause the span to collapse. These girders may be welded plate girders, riveted plate girders, and steel box beams. The fracture critical elements in all of these girders are in the bottom flange and the web adjacent to the bottom flange as shown in Figure 12.a.

b. Anchor Cantilever. An anchor cantilever span arrangement induces tension in the top flange and adjacent portion of the web in the area over the support as shown in Figure 12.b.

c. Continuous Spans. Continuous spans should be reviewed by a structural engineer or bridge designer to assess the actual redundancy and consequent presence of FCMs. In general, the fracture critical elements

FIGURE 12

PORTIONS OF A GIRDER IN TENSION

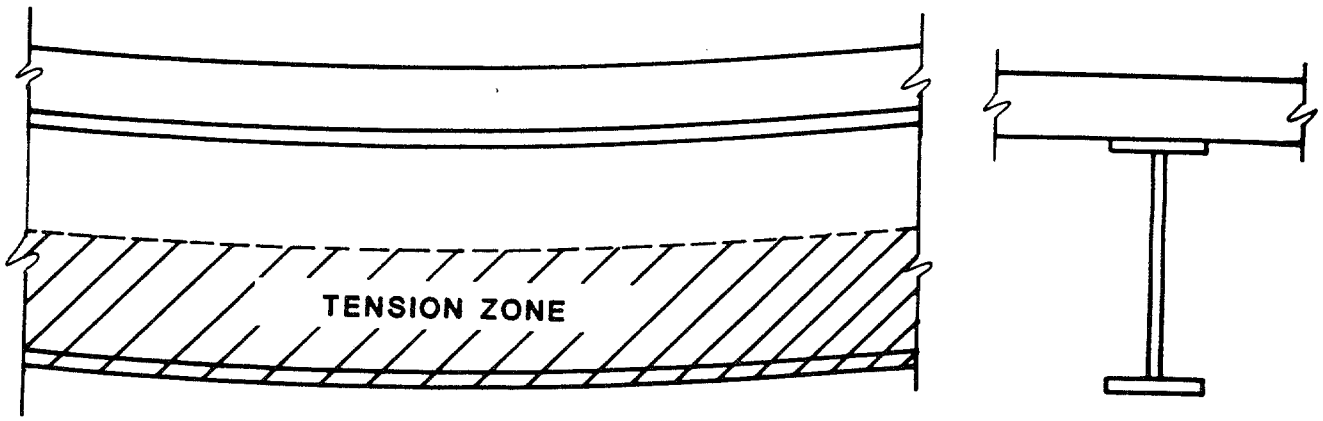

SECTION AT MID-SPAN

A.

Positive Bending

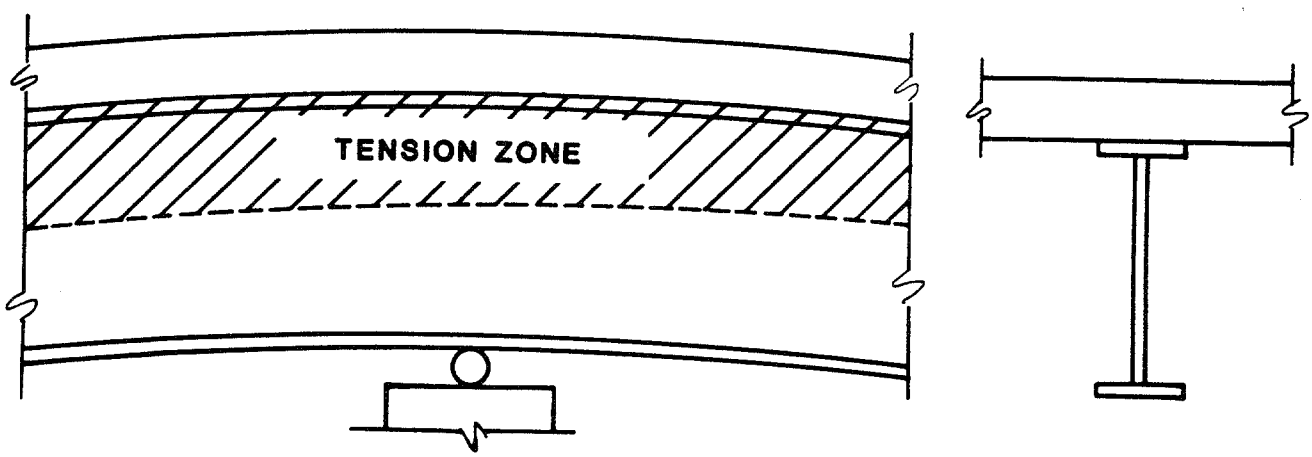

SECTION OVER PIER

B.

Negative Bending

will be located near the center of the spans in the bottom of the girders and over the supports in the top of the girders.

2-2.2 Two Truss Systems

a. Simple Spans. A truss is composed of top and bottom chords, verticals, and diagonals as shown in Figure 13. Trusses types are: pony, through, or deck as shown in Figure 14. Most truss bridges have only two trusses.

A simply supported truss may be considered a specialized girder with most of the web removed. Since tension members are the critical elements, the bottom chord is of primary concern. It is easy to visualize that the bottom chord must stretch as the span bends which by definition indicates that it is in tension. Fracture of the bottom chord could result in collapse of the span.

The stresses in truss diagonals may either be in tension or compression depending on the geometry of the truss and the load configuration.

A simplified way to determine if a truss diagonal is in tension is to follow the rule of thumb shown in Figure 15. For simple span trusses, diagonals that point upward toward mid-span act like an imaginary arch being in compression while diagonals which point upward away from mid-span act like an imaginary cable being in tension and therefore are fracture critical members. From the point of view of the inspector, all truss members in

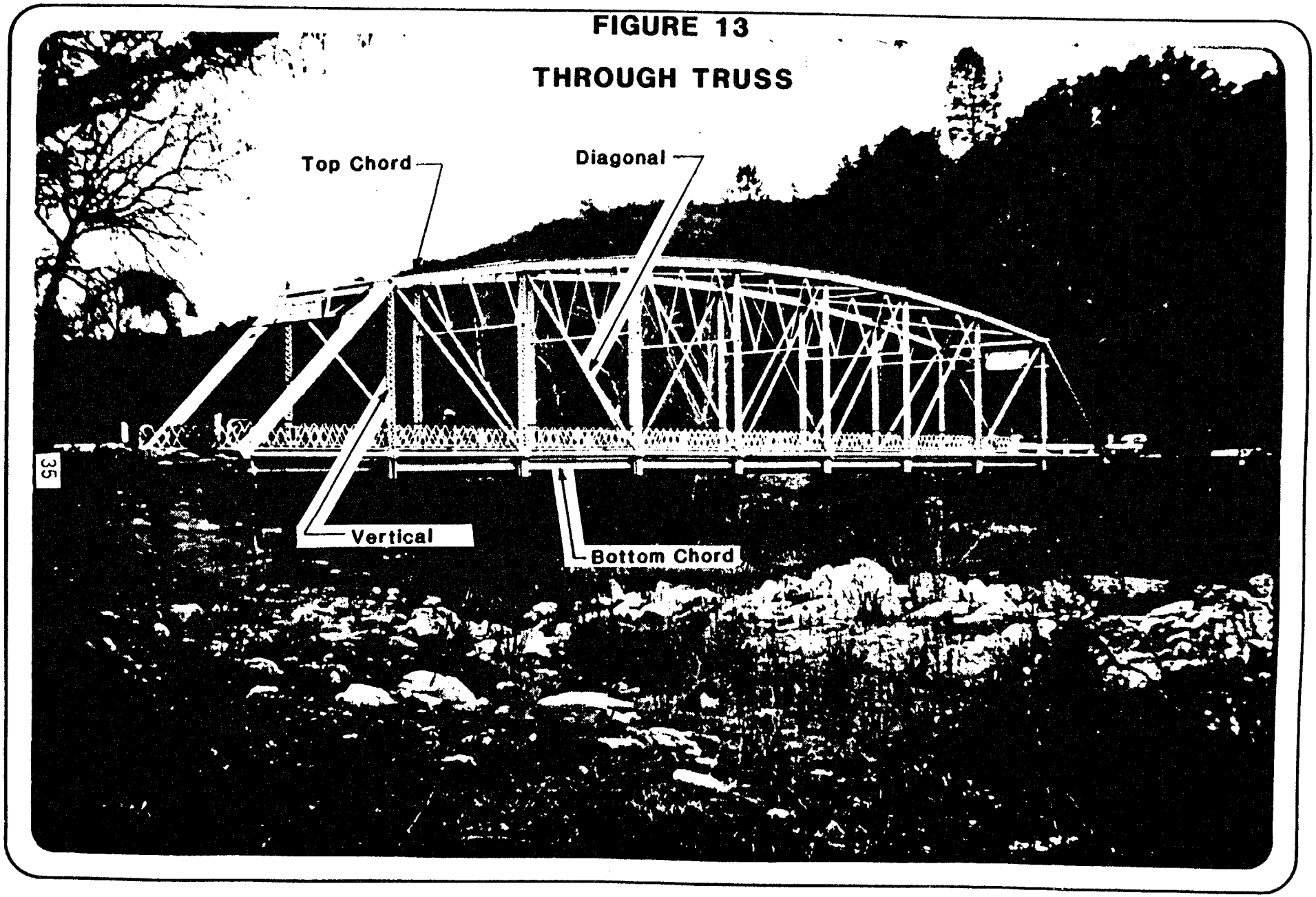

Member identification in through truss

FIGURE 14
TRUSS MEMBERS

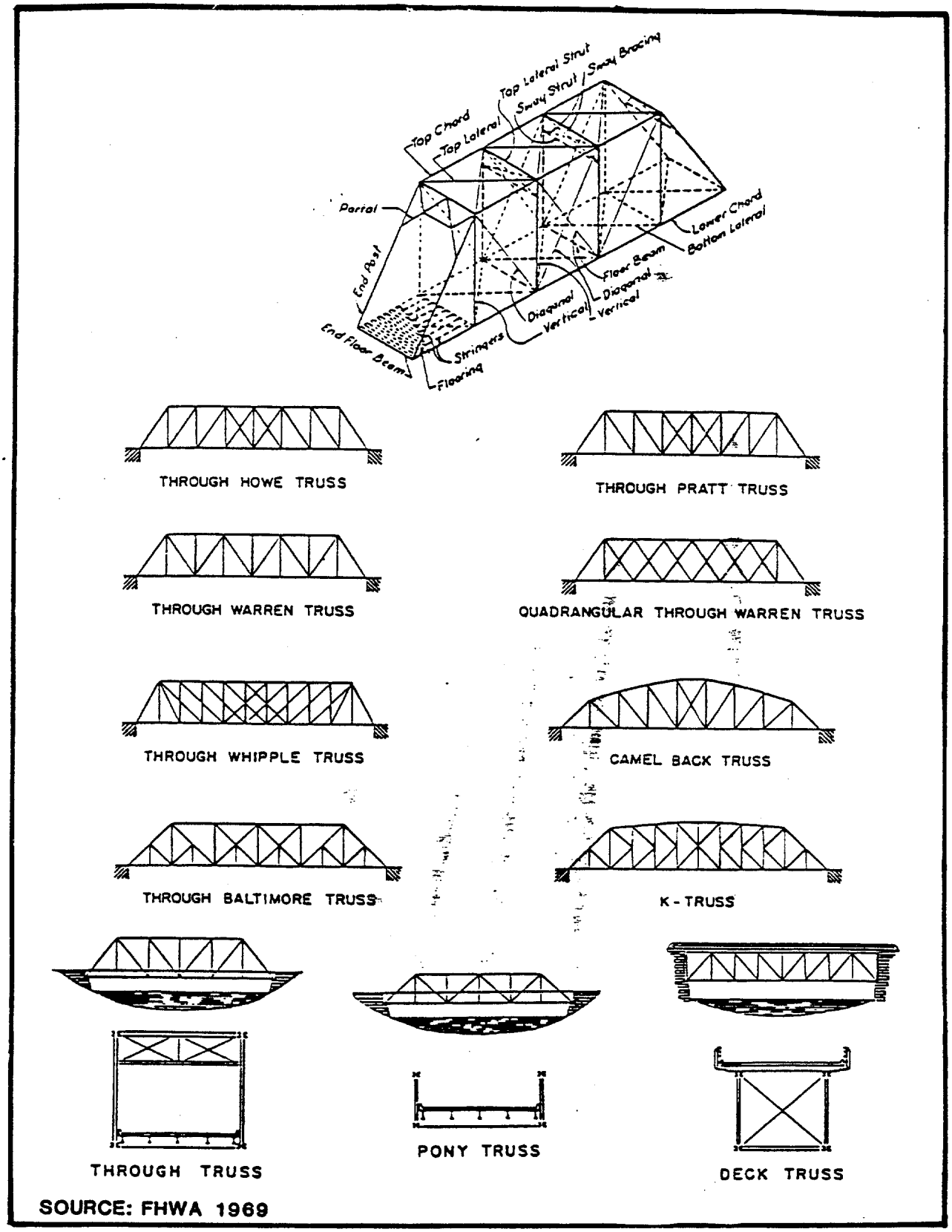

SOURCE: FHWA 1969

FIGURE 15

SIMPLE SPAN TRUSS

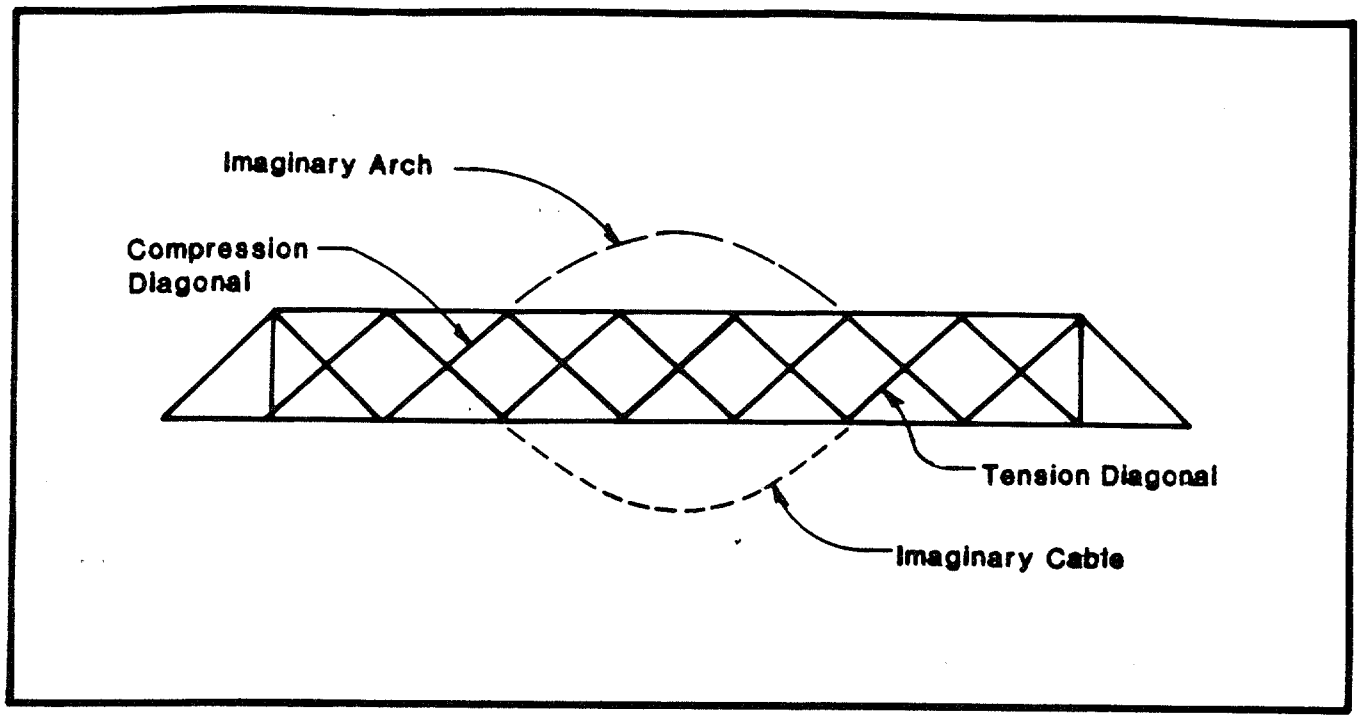

Simplified method for predicting stress state in diagonals

tension should be regarded as fracture critical or an engineer should make a detailed analysis to determine criticality.

The forces acting on truss verticals can be determined using the rule of thumb which is illustrated in Figure 16. First, the force in a vertical with one diagonal at each end is opposite to the force in the diagonals. If the diagonals are in compression, then the vertical is in tension. Second, the force in a vertical with two diagonals at one end is similar to the force in the diagonal which is nearer to the mid-span. If the diagonal closest to mid-span is in tension, then the vertical is in tension. Third, if a vertical has counters (double diagonals) on both sides, it is in compression.

b. Anchor-Cantilever. The anchor cantilever in a truss system is similar to that in a girder system. In the area over the pier (interior support) the top chord is in tension. In the area near the abutment (end support) the truss is similar to a simple span truss and the same principles apply. From the center of the anchor span to the interior support, the stress arrangement is more complex and should be analyzed by a structural engineer.

c. Continuous Spans. The statements regarding continuous girders are also true regarding continous trusses. In a continuous truss the number of members in tension varies with the loading. Consequently, the determination of which members are in tension and which are fracture critical should be made by an experienced structural engineer. In the Sewickley Bridge (75), a

FIGURE 16

ANALYSIS OF VERTICALS

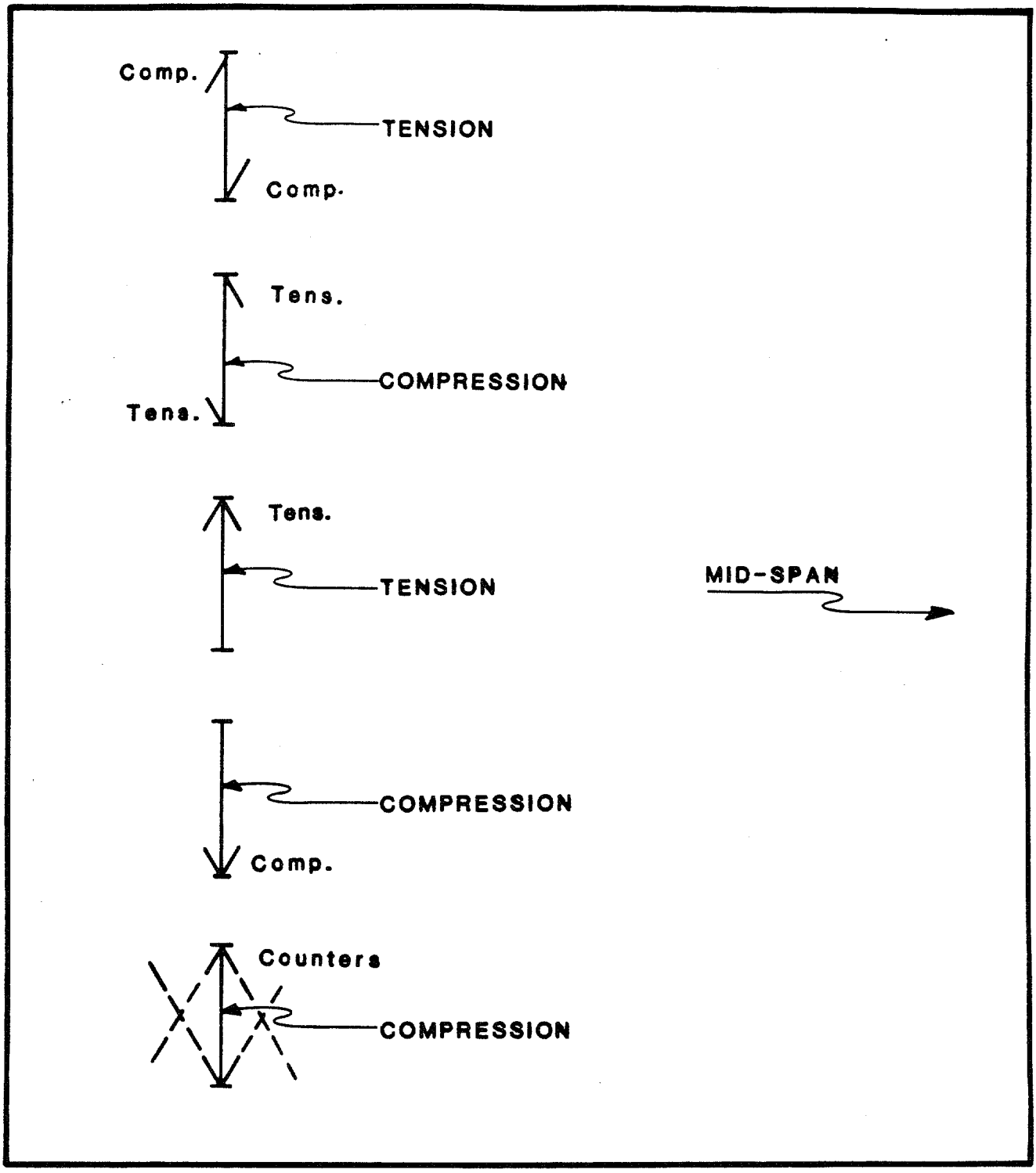

structure with 119 members, a detailed analysis determined that 66 were tension members and 30 of these were found to be fracture critical. The basic assumption should be that all tension members are fracture critical until a detailed study can be completed. The detailed study should be based on the engineer's knowledge and experience, but the usual procedure is to remove the members one at a time to see if any of the remaining members reach the yield point stress.

2-2.3 Tied Arch

The ties of tied arches, as illustrated in Figures 17 and 18 are fracture critical because tied-arch bridges are nonredundant. The tie girder prevents the supports from spreading apart, is in tension, and is subject to certain other bending stresses where the floorbeams are framed into the tie. In modern designs, the tie girder is often a large welded box girder.

2-2.4 Suspension Spans

a. Eyebar Chain Suspension Spans. The National Bridge Inspection Program began as a result of the collapse of the Silver Bridge shown in Figures 19 and 20. In this type of construction the main suspension member is composed of eyebars fabricated into a chain. Some have as few as two eyebars per link, some have six or more. Figure 21 illustrates a typical critical detail. If members have three or more eyebars they offer some degree of internal redundancy, but members with two or less eyebars should

FIGURE 17

TIED ARCH

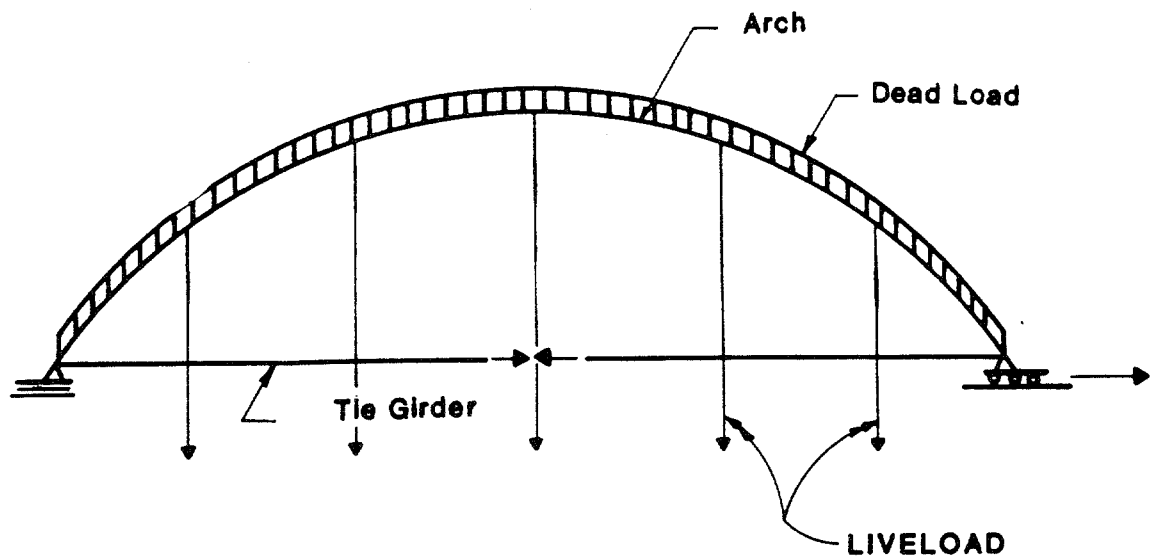

Illustration of applied forces causing tension in tie

FIGURE 18

TIED ARCH

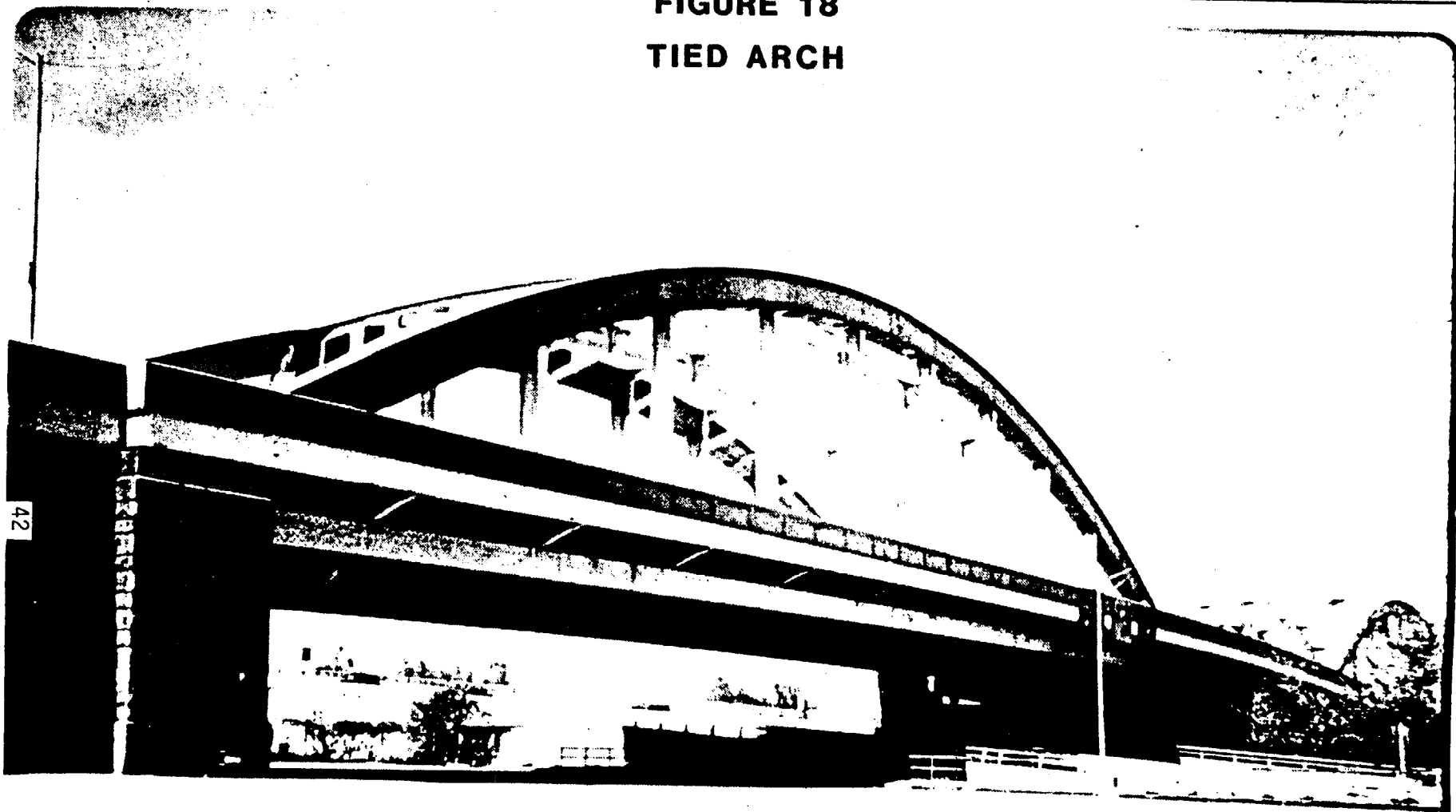

Tied Arch Circa 1950 in Baltimore, Maryland

FIGURE 19
SILVER BRIDGE

(1) FRACTURE OCCURRED IN SYMMETRICALLY OPPOSITE LOCATION TO THE RIGHT OF RIGHT HAND TOWER (OUT OF PICTURE).

SOURCE: OECD, 1976

FIGURE 20
SILVER BRIDGE AFTER COLLASPE

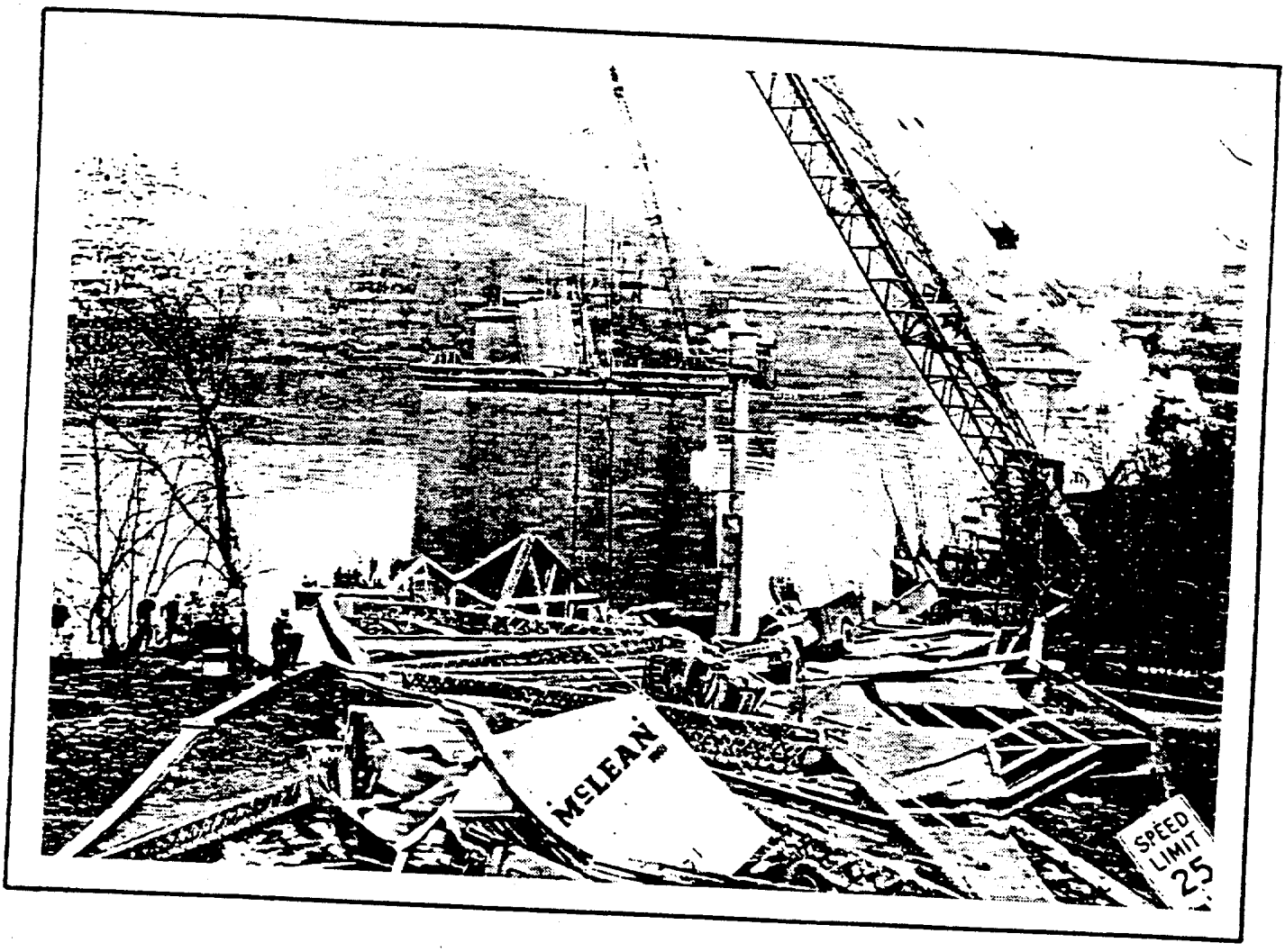

SOURCE: OECD 1976.

FIGURE 21
EYEBAR CHAIN - HANGER CONNECTION

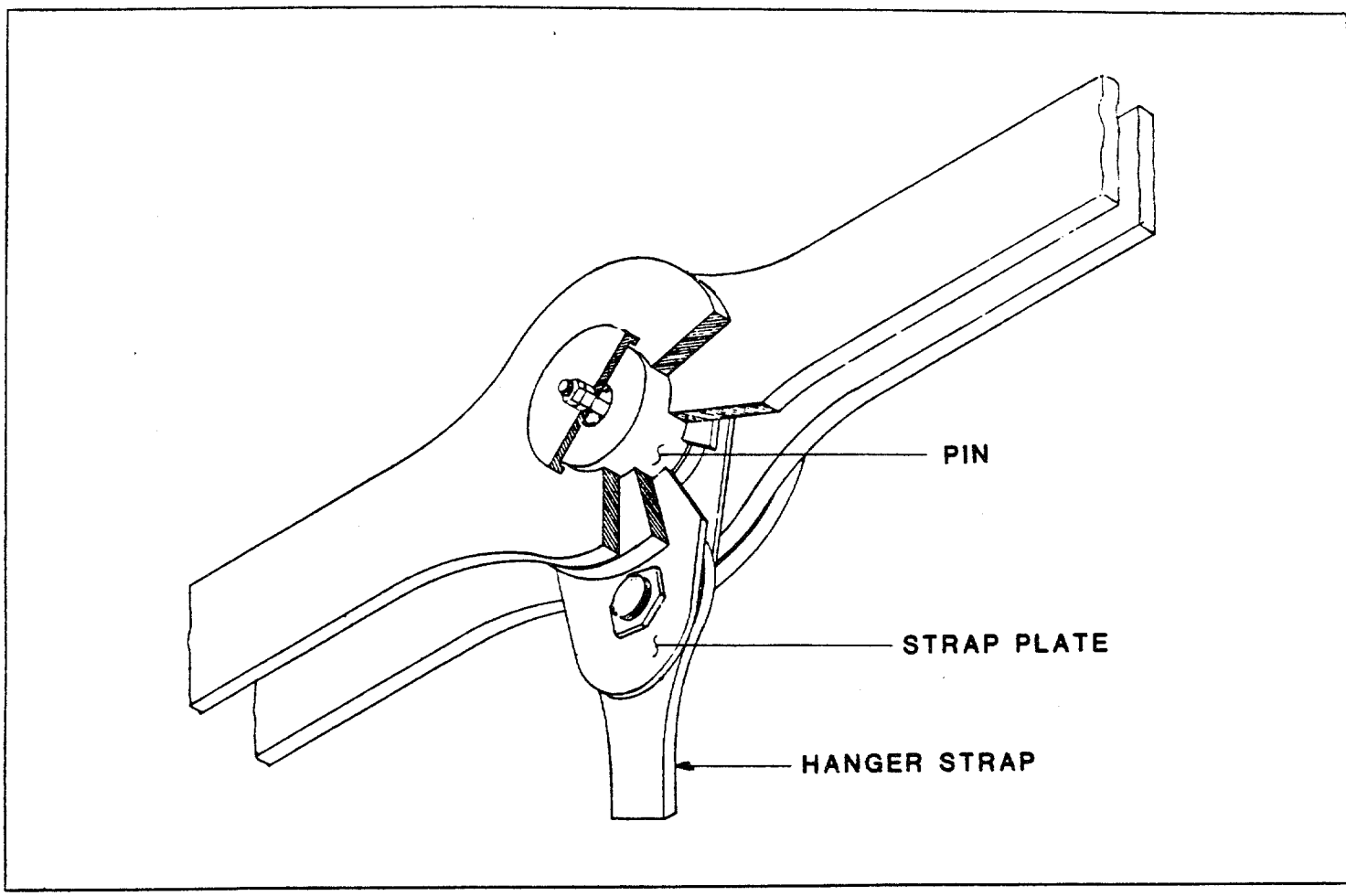

Typical eyebar chain joint for portions of the eyebar chain where the chain was not framed into truss members. Note hanger strap and strap plates in the center of photograph. The strap plate was connected to the top chord of truss members vertically below the eyebar joint. This plate shows makeup of joint C13 north of the Silver Bridge.

fracture critical. A member with more than two eyebars should be subject to further analysis to determine if it is fracture critical.

b. Cable. Cable suspension spans, such as that shown in Figure 22, are nonredundant. The main cables are difficult to inspect since they are normally wrapped for corrosion protection. The cables are composed of numerous strands each of which is composed of several wires as illustrated in Figure 23. Consequently, the cables are internally redundant. Failure of any vertical suspenders may or may not result in collapse. Any main cable failure, however, would cause collapse.

c. Cable stayed bridges. Cable stayed bridges, such as that shown in Figure 24, are becoming increasingly popular. On the surface it appear that the fracture of one tie is unlikely to cause collapse, however these structures are of such complexity that an analysis should be made by an engineer familiar with this design to determine and rate the various ties in regard to criticality.

2-2.5 Cross Girders and Pier Caps

Simply supported cross girders and steel pier caps, as shown in Figure 25, are nonredundant. These members usually consist of I sections or box beams. Unlike floorbeams which support only a portion of the deck, cross girders and steel pier caps support the entire end reactions of two longitudinal spans.

FIGURE 22
CABLE SUSPENSION BRIDGE

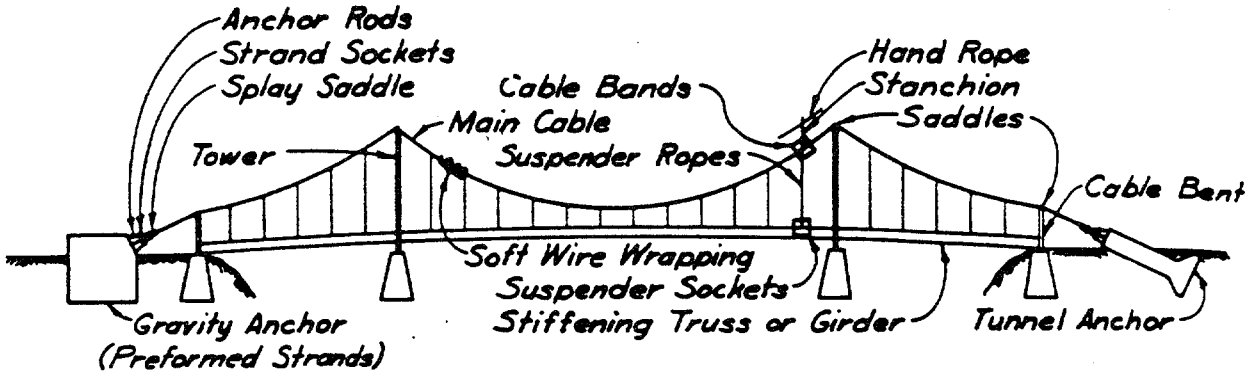

Identification of primary structural parts of

Cable Suspension Bridge

SOURCE: FHWA, 1969.

FIGURE 23
BRIDGE CABLES

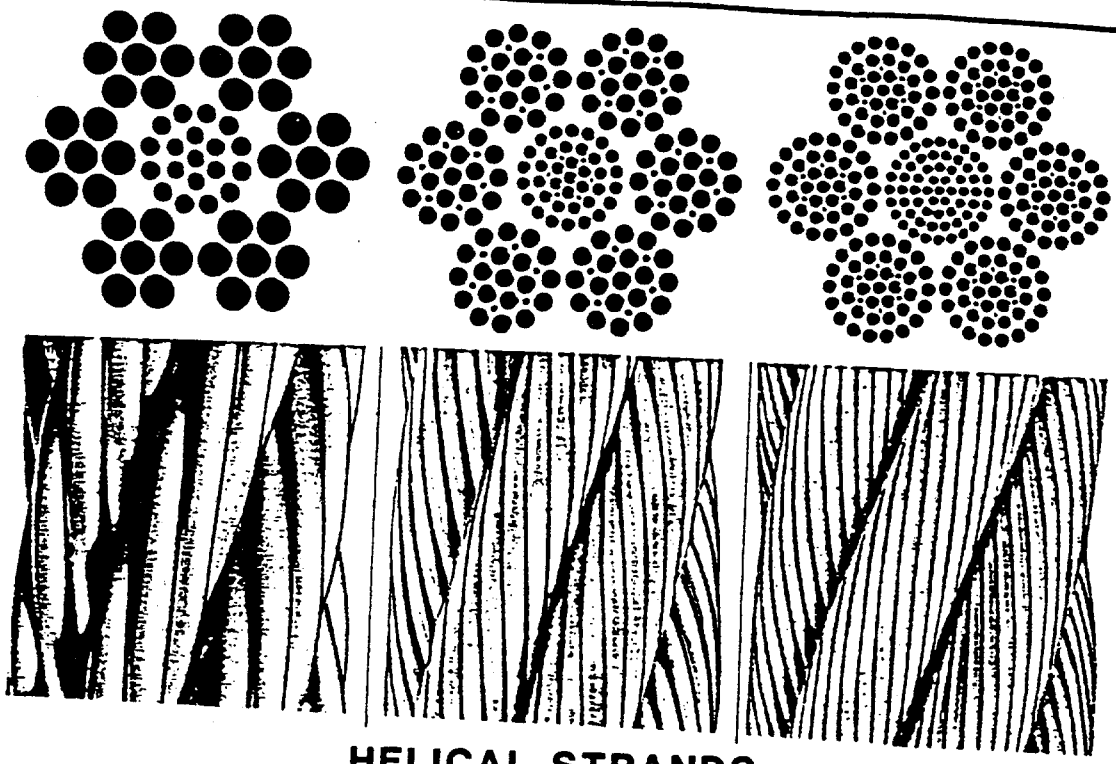

HELICAL STRANDS

PARALLEL STRANDS

FIGURE 24

CABLE STAYED BRIDGE

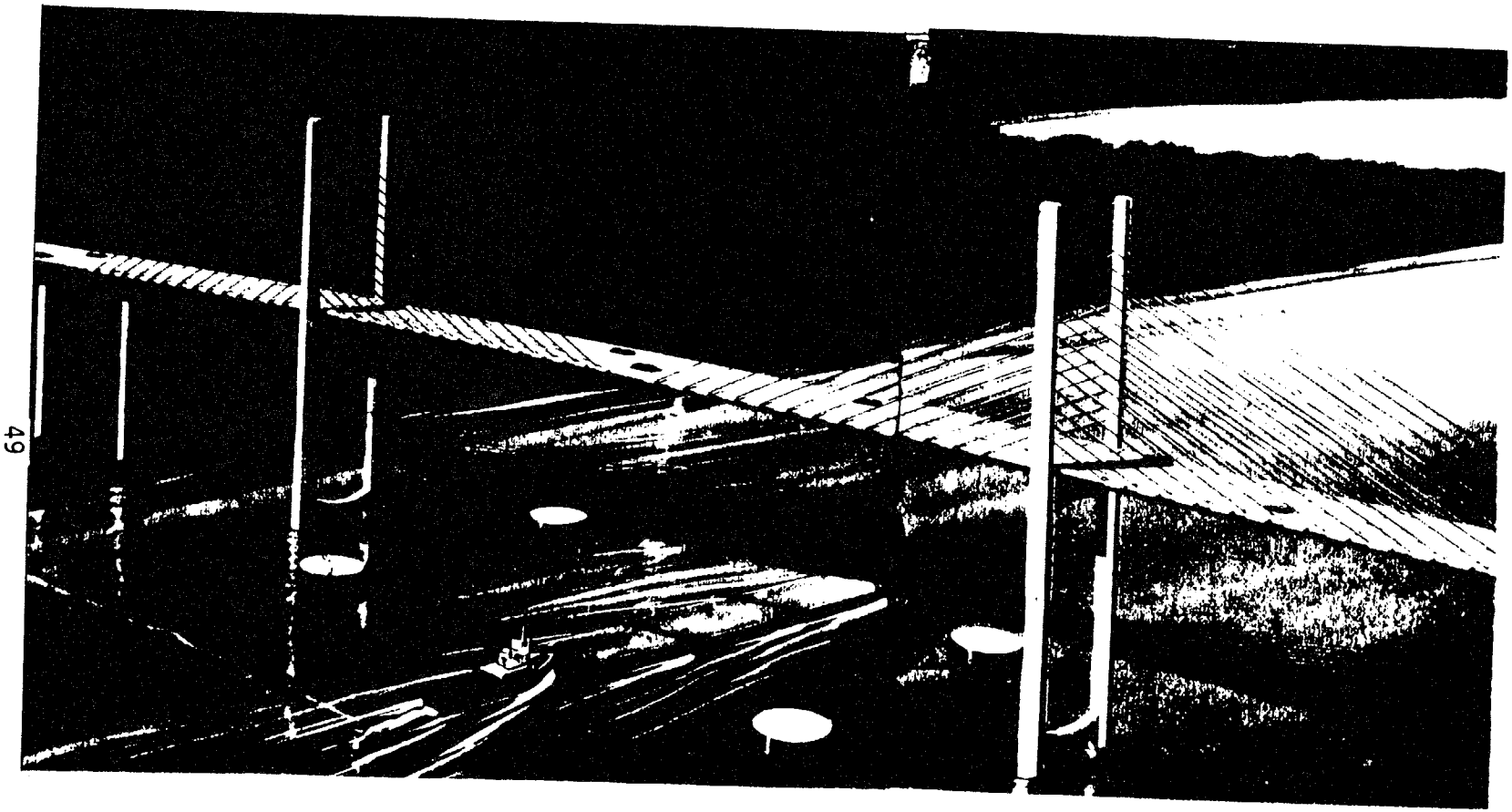

Artists rendition of proposed cable stayed bridge over Mississippi River

FIGURE 25

CROSS GIRDER

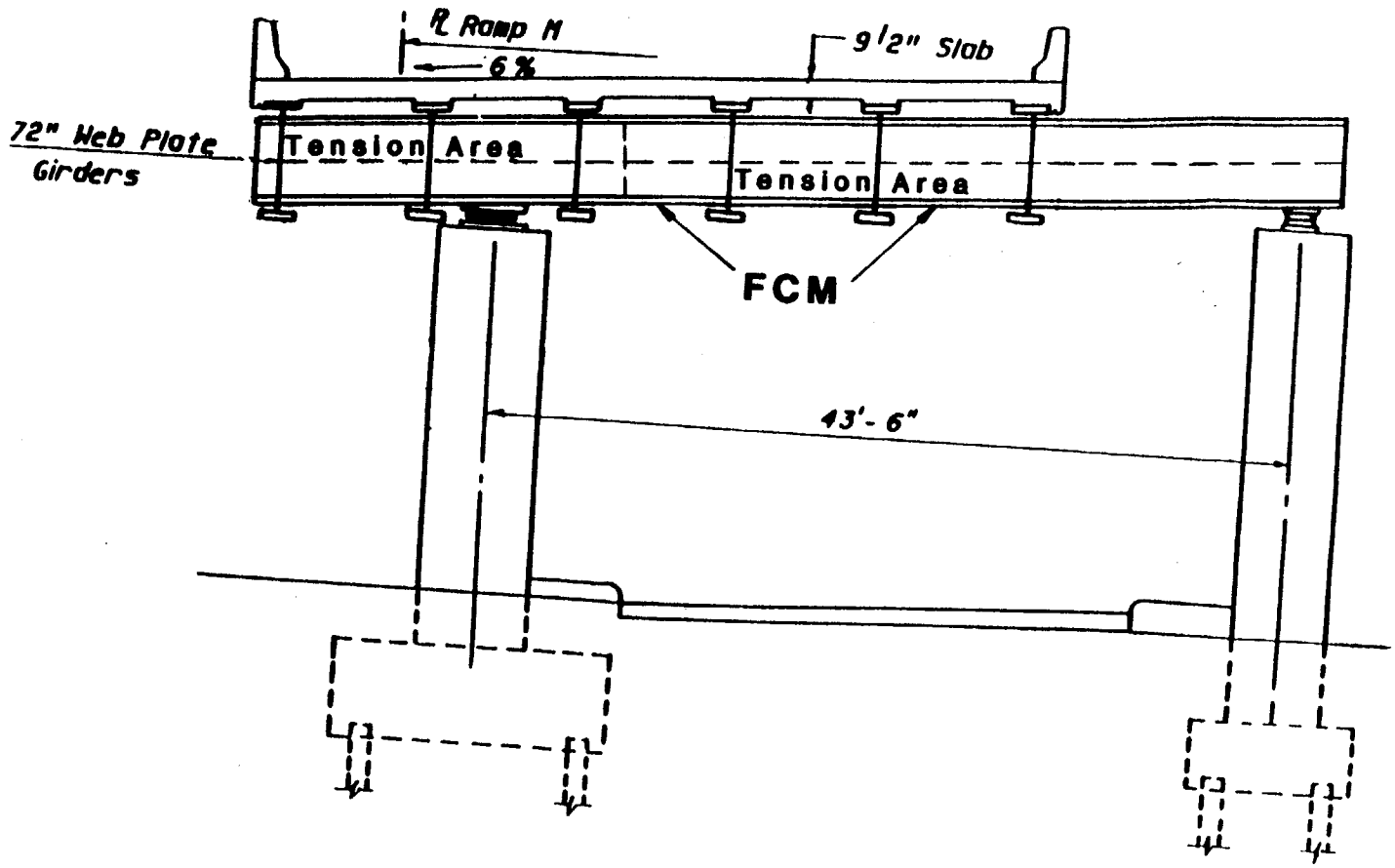

Location of tension areas in cross girder

2-2.6 Pin and Hanger Supports

A pin and hanger assembly is used to support a suspended span from a cantilever span. An example of a pin and hanger is shown in Figure 26. It was the failure of the pin and hanger assembly which caused the collapse of the Mianus River Bridge. Pin and hanger assemblies are as redundant as the framing system in which they are used. Hangers in a two-girder framing system offer no redundancy while the same assemblies used in a multi-beam system have a high degree of redundancy.

An alternate support to the pin and hanger assembly is shown in Figure 27. Portions of this detail (the short cantilever projection from the girder to the right) are fracture critical because part of it is in tension and its failure will cause collapse unless it is used in a redundant framing system.

FIGURE 26 TYPICAL HANGER

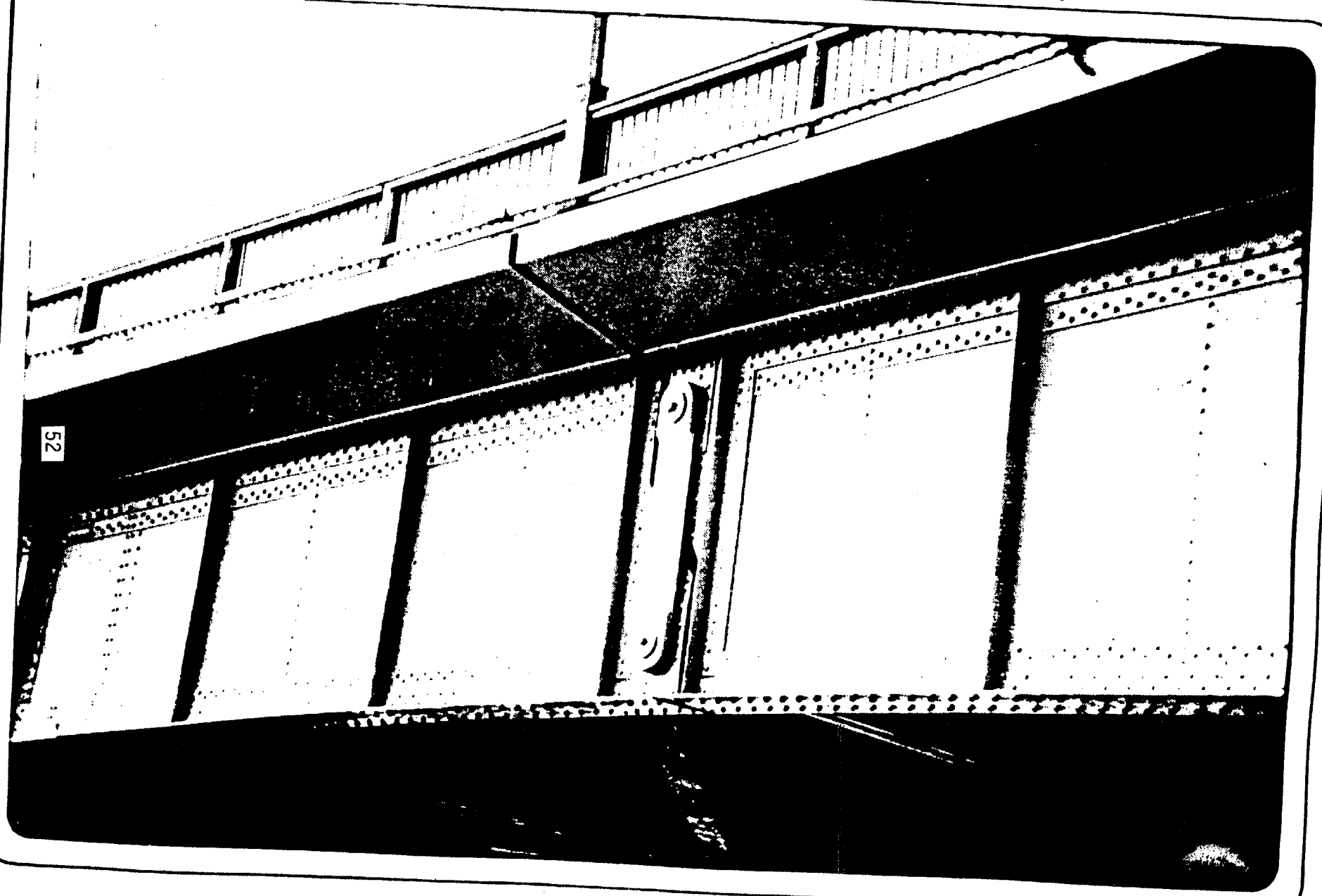

Hanger connection on Theodore Roosevelt Bridge, Washington, D.C.

FIGURE 27
SEATED SPANS

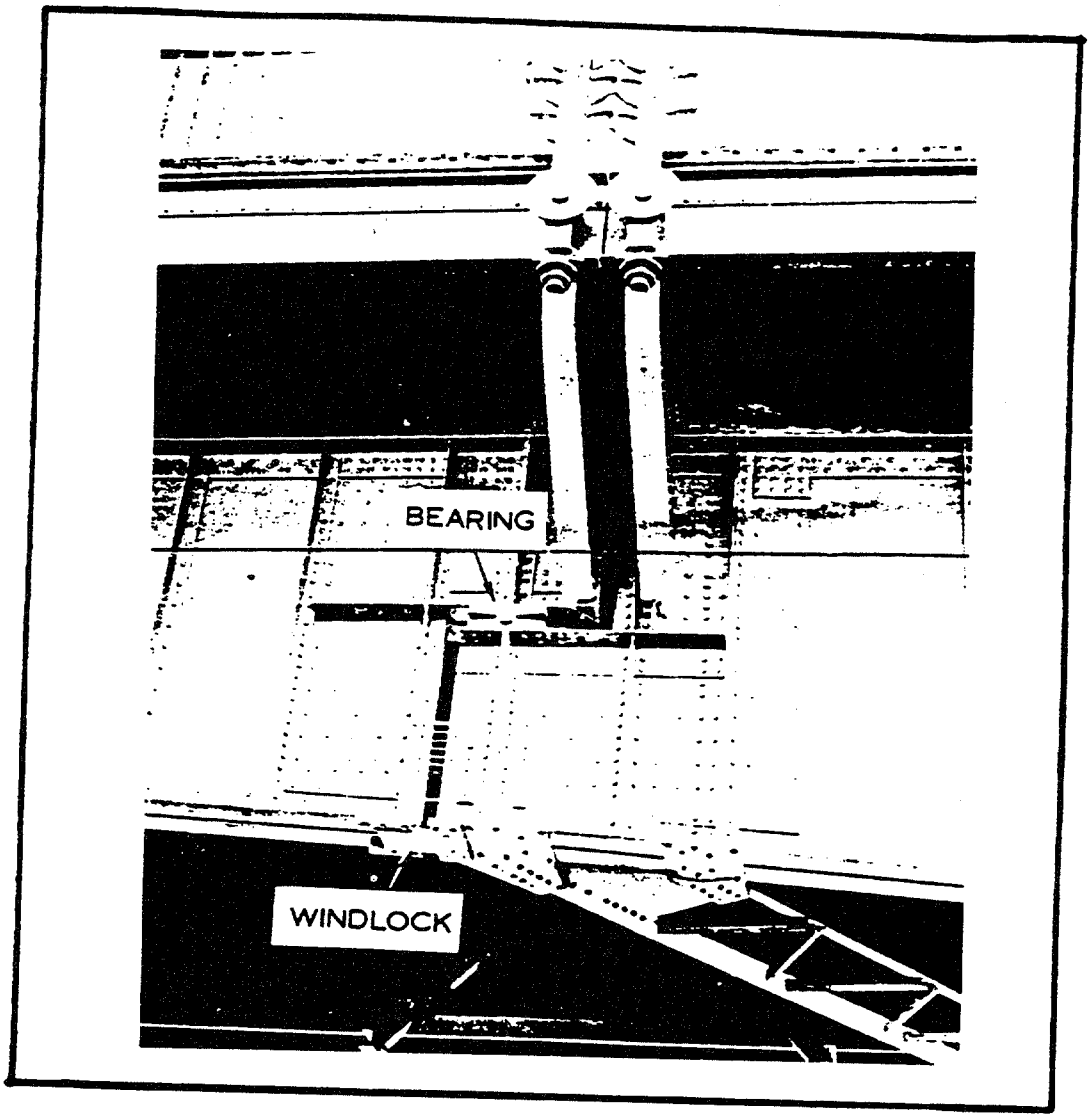

Cantilever girder with direct bearing. Note windlock.

SOURCE: FHWA, 1969.

CHAPTER 3

FAILURE MECHANISMS

3.1 Introduction

The complete failure process of a member consists of three phases: crack initiation, crack propagation, and fracture. A crack first initiates from flaws located at points of stress concentrations in structural details. It then propagates across the section of the member until it reaches a critical size at which time the member fractures under the right combination of load and temperature. The fracture can be brittle, ductile, or a combination of both. The critical flaw size is generally smaller at high loads and low temperatures.

The tensile stress cycles needed to initiate and propagate a crack are usually induced by trucks crossing the bridge, with each truck causing one or more major stress cycles. Wind and temperature changes may also cause stress cycles. The total number of cycles that are applied on a bridge during both the crack initiation and propagation phases is called the fatigue life. Fatigue crack initiation and propagation generally precede the fracture of a bridge in service. But under the right conditions, of loading and temperature, built in initial flaws may induce fracture even without crack propagation. The fracture suddenly ends the service life of the bridge.

The three phases of cracking - initiation, propagation, and fracture - and the mechanisms that drive the crack, are described in the remainder of this chapter.

3.2 Fatigue Crack Initiation

Fatigue cracks initiate from flaws at structural details. The most critical conditions for crack initiation are those combining a flaw with a detail of high stress concentration. Such conditions are often found at weldments, which are known to be prone to crack initiation. The larger the flaw and the higher the applied stress range, the faster cracks will initiate.

Every structure contains flaws whose size and distribution depend upon the material, fabrication, handling and service conditions. They vary in size from very small nonmetallic inclusions to large weld cracks and are present even though the structure may have been inspected and the detectable flaws repaired.

Flaws exist in many different forms. The base metal, of which the structure is fabricated, may contain external flaws such as surface laps, or internal flaws such as nonmetallic inclusions and lamellar tears.

Fabrication introduces a variety of flaws. Among them are weld flaws consisting of: incomplete fusion, slag inclusions, porosities, blow holes,

undercuts, start and stop positions, craters, arc strikes, back-up bars left in place, and cracks. Repairing a weld flaw does not always eliminate the problem. The repair weld, too, may be flawed. Other flaws that can occur in fabricated structures are: damage around the edges of drilled and punched holes; and gouges, notches, and grinding marks from coping, flame cutting, and grinding operations.

Careless handling during transportation and erection may leave nicks, notches, indentations, and chain marks along the edges of members.

Once the structure is placed in service, some members may be prone to collision by errant vehicles which may nick, tear, and excessively strain the steel. Improper heat straightening may damage the steel. Deep corrosion pits can develop in structures which are improperly detailed for corrosion control, poorly maintained, and constructed of bare steel.

Bridge structures, particularly those that are welded, cannot be fabricated without flaws and details of high stress concentrations. Good detailing can reduce the number and severity of stress concentrations, but the need to connect girders, stringers, floor beams, diaphragms, bracing, truss members, hangers, and other members makes it impossible to avoid stress concentrations.

In summary, all members and details have flaws. Given a sufficient number of stress cycles, fatigue cracks will eventually initiate. The crack initiation life is relatively short for details that have a high stress

concentration, such as the welded cover plate end. At the other extreme, it can be very long for plain rolled members that have no welded, bolted, or riveted attachments, making crack initiation unlikely in those members.

3.3 Fatigue Crack Propagation

Once a fatigue crack has initiated, applied cyclic stresses propagate the crack across the section of the member until it reaches a critical size at which time the member fractures.

Figure 28, an example of a flange crack, shows a partial length cover plate welded to the tension flange of a rolled beam, longitudinally along its sides and transversely across the ends. One or more cracks initiate at the weld toe of the transverse end weld. Thereafter, the crack grows in two stages. First, the small cracks that have initiated join each other and form a larger part-through surface crack of thumb-nail shape which then propagates in the thickness direction of the flange until it reaches the inside surface as illustrated in Figure 28. Once it breaks through the thickness of the flange, the shape rapidly changes into that of a three-ended crack. During the second stage the crack then propagates with two fronts moving across the flange width and one front moving into the web until the member fractures as shown in Figure 29.

During the first stage of propagation, the part-through surface crack is barely visible as a hairline along the toe of the cover plate-to-flange weld on the outside surface of the flange. During the second stage, it is

FIGURE 28

CRACK GROWTH AT COVER PLATE WELDED TO FLANG
STAGE 1: PART THROUGH CRACK

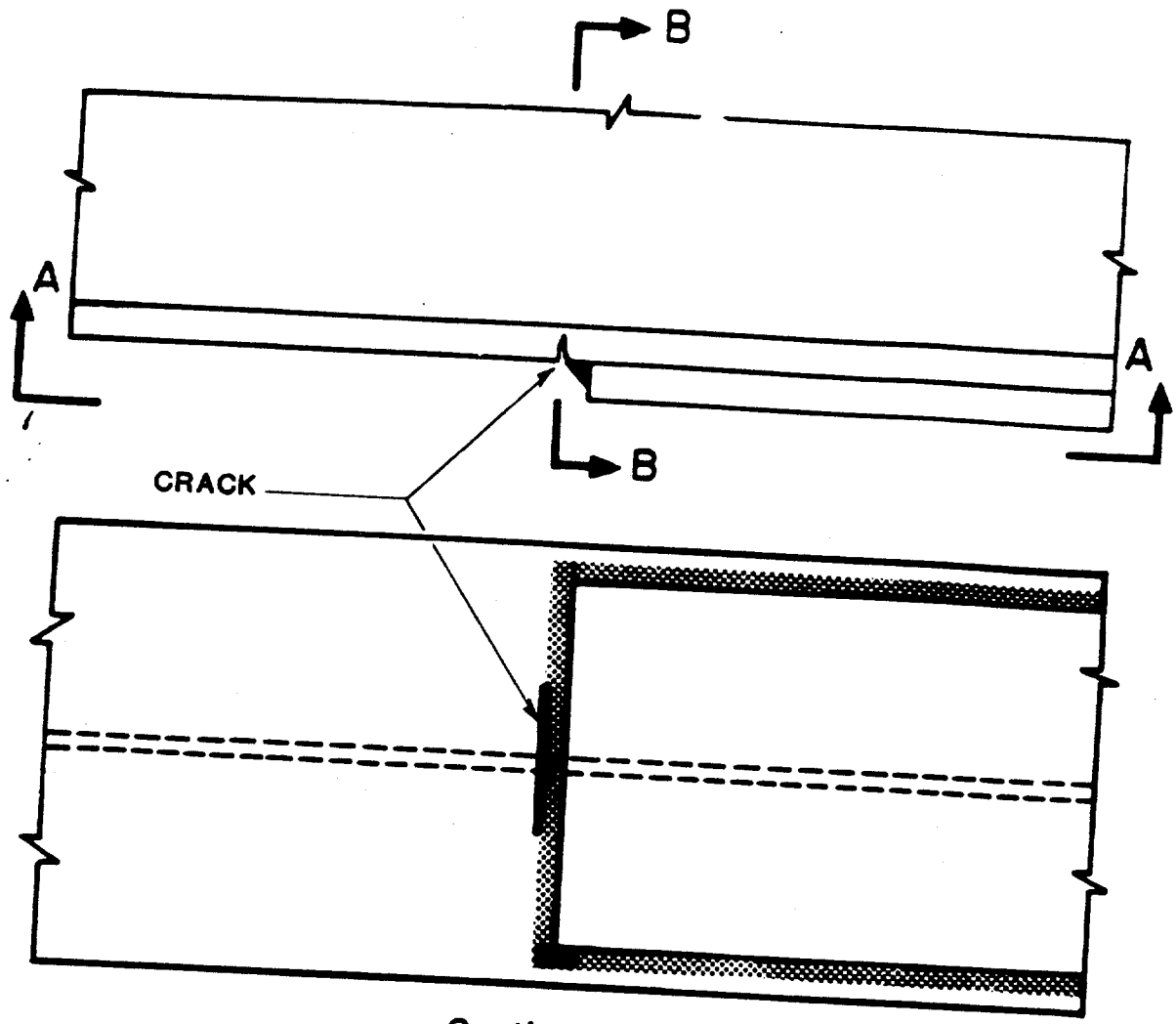

Section A

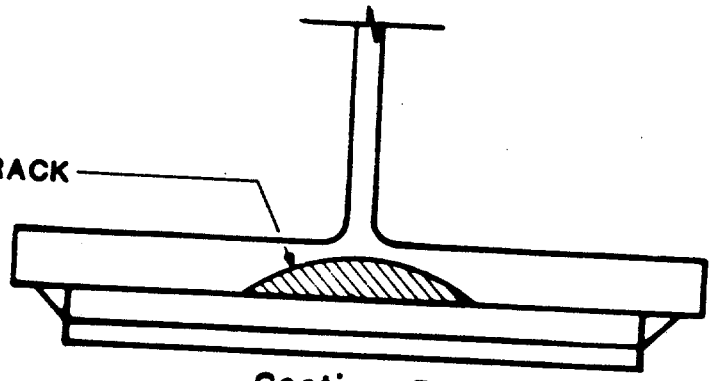

Section B

FIGURE 29

CRACK GROWTH AT COVER PLATE WELDED TO FLANGE

STAGE 2: THROUGH CRACK

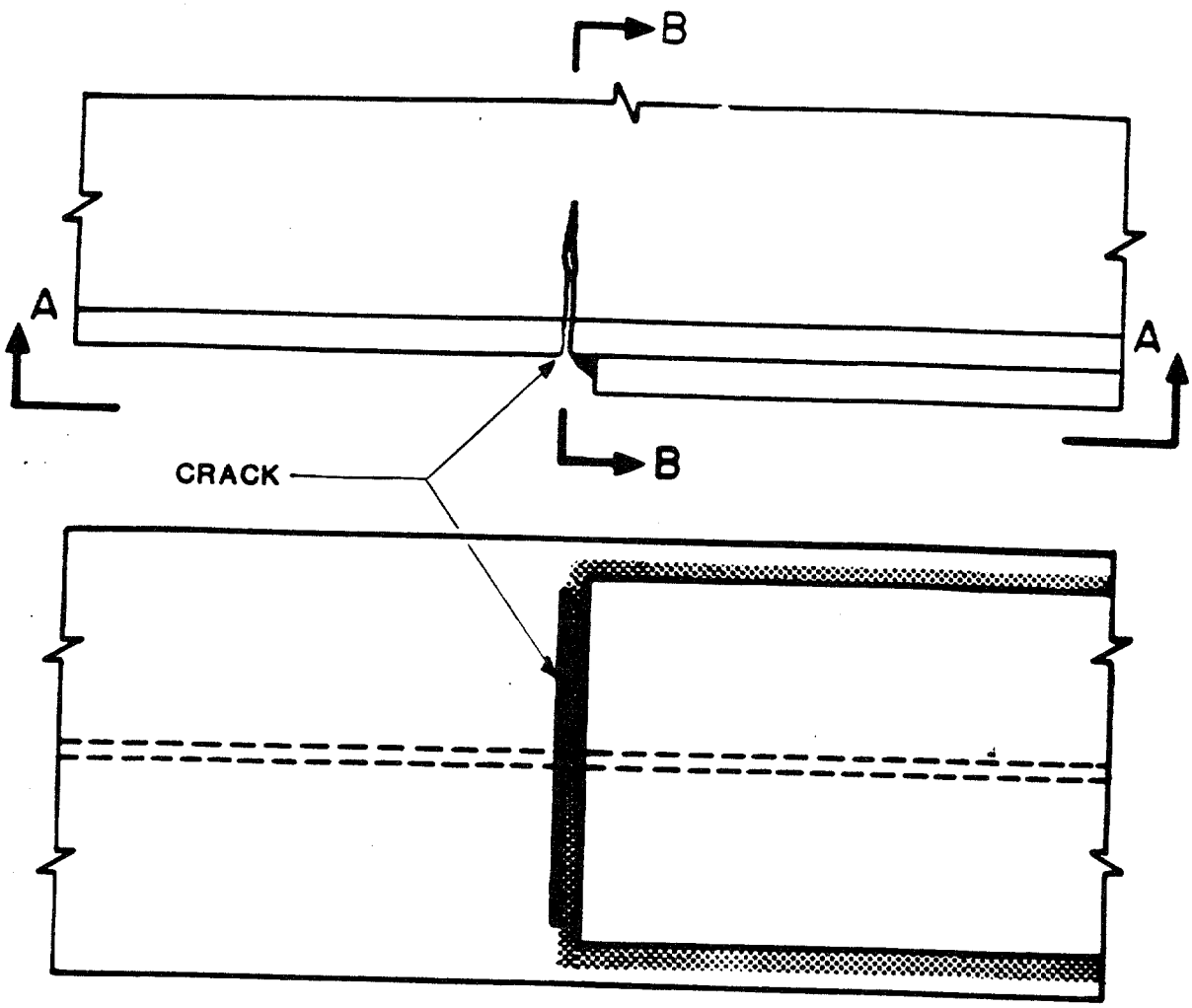

Section A

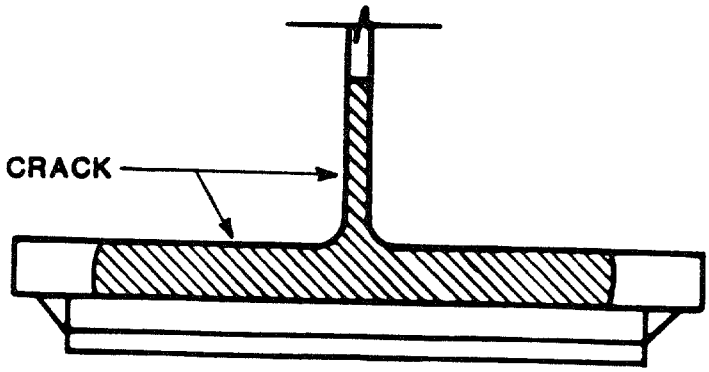

Section B

readily visible as a through-the-thickness crack on both the inside and outside surfaces of the flange. Crack propagation begins at a very slow rate and gradually accelerates as the crack grows in size. As a result, about 95% of the fatigue life is spent growing the Stage 1 part-through crack, and only 5% growing the Stage 2 through crack. Of significance to visual inspection is the fact that cracks are only readily detectable by the naked eye as a through crack after most of the fatigue life of the detail is gone. Therefore a structural engineer must be immediately notified when cracks are found in the flange.

When the toe of the transverse end weld is treated in a way that reduces its stress concentration - such as grinding, peering or tungsten inert gas remelting - crack initiation may shift from the toe to the root of the weld. In this case, the part-through crack propagates through the thickness of the cover plate and is not visible unitl it breaks through the plate thickness.

Figure 30, an example of a web crack, shows a transverse stiffener welded to the web of a beam. A fatigue crack initiates at the weld toe near the end of the stiffener and propagates during the first stage as a part-through crack in the thickness direction of the web until it reaches the back surface as shown in Figure 30.a. After it breaks through the web, the shape changes into a two-ended through crack which propagates up and down the web as shown in Figure 30.b. Eventually, the lower front reaches the bottom of the flange, and the three-ended crack then propagates with two

FIGURE 30

CRACK GROWTH AT TRANSVERSE STIFFENER WELDED TO WEB

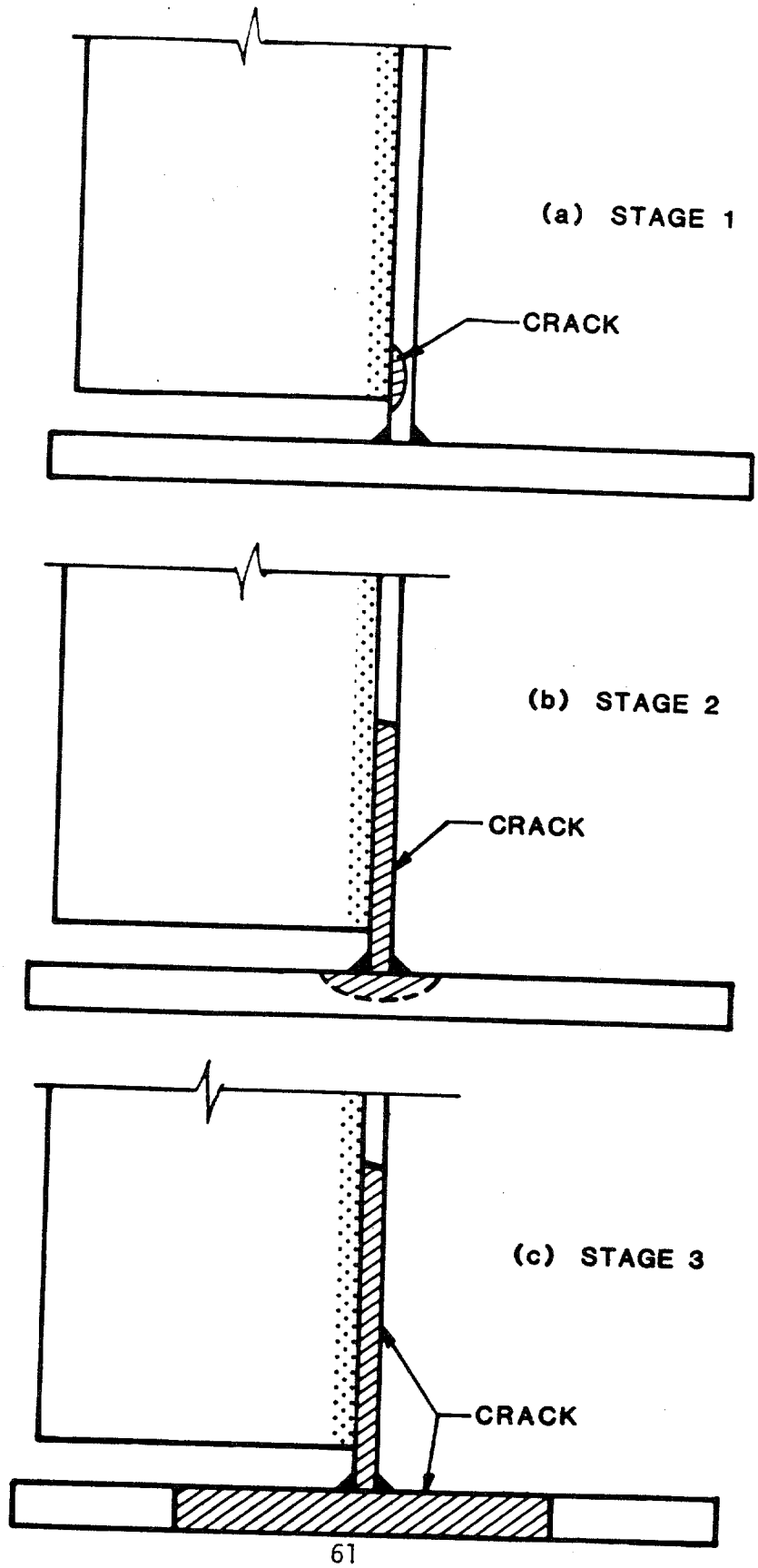

fronts moving across the flange and one front moving farther up the web, until the member fractures as shown in Figure 30.c. When the steel is brittle, the member can prematurely fracture at an early stage of growth.

Displacement induced out-of-plane bending may cause cracks at the end of the stiffener, parallel to the flange. This mode of cracking is described in section 4-3.3g.

As for the cover plate, during the first stage of propagation the part-through stiffener crack is barely visible as a hairline along the toe of the weld. During the second and third stages the through crack can be readily seen on both sides of the web and is also visible later on both sides of the flange. The stiffener crack spends about 80%, 15%, and 5% of the fatigue life propagating in the three stages, respectively. In this case, since the fraction of the life spent in through-crack propagation is longer than for the cover plate, 20% versus 5%, there is more time available to find the crack if the steel has adequate toughness. Still, cracks found in the web must also be brought to the immediate attention of the structural engineer.

The three major parameters affecting the fatigue crack propagation life are: stress range, number of cycles, and type of detail. The stress range is defined as the algebraic difference between the maximum stress and the minimum stress calculated at the detail under consideration. In other words, it is the value of the cyclic stress caused by a truck crossing the bridge. The weight of the bridge produces a constant stress, instead of a

cyclic stress, and therefore does not affect the crack propagation life. Only stress ranges in tension or stress reversal, shown in Figure 31, can drive fatigue cracks to failure. Stress ranges in compresson may cause cracks to grow to some extent at weldments where there are high residual tensile stresses. But these "compression" cracks eventually arrest. They do not induce fracture of the member.

The second parameter - number of cycles - is in most bridges the number of trucks that cross the bridge in either direction during its service life, each causing a major stress cycle. In some bridges, the number of cycles are induced by wind loading.

Finally, the term "type of detail" refers to the stress condition in a member or connection, for example: cover plate, transverse stiffener, flange groove weld, bolted joint, etc. For purpose of designing bridges for fatigue cause by in-plane bending, the details are grouped, into categories labeled A to F. Each letter represents a rating given to a detail which indicates its level of fatigue strength. The details assigned to the same category have about equally severe stress concentrations and comparable fatigue lives. The alphabetical classification by the severity of the stress concentration is a useful method of identifying fatigue strength. When used in inspection, it serves as a reminder of which details are apt to be prone to fatigue cracking. The classification of details by category does not apply to details that crack because of out-of-plane bending.

FIGURE 31

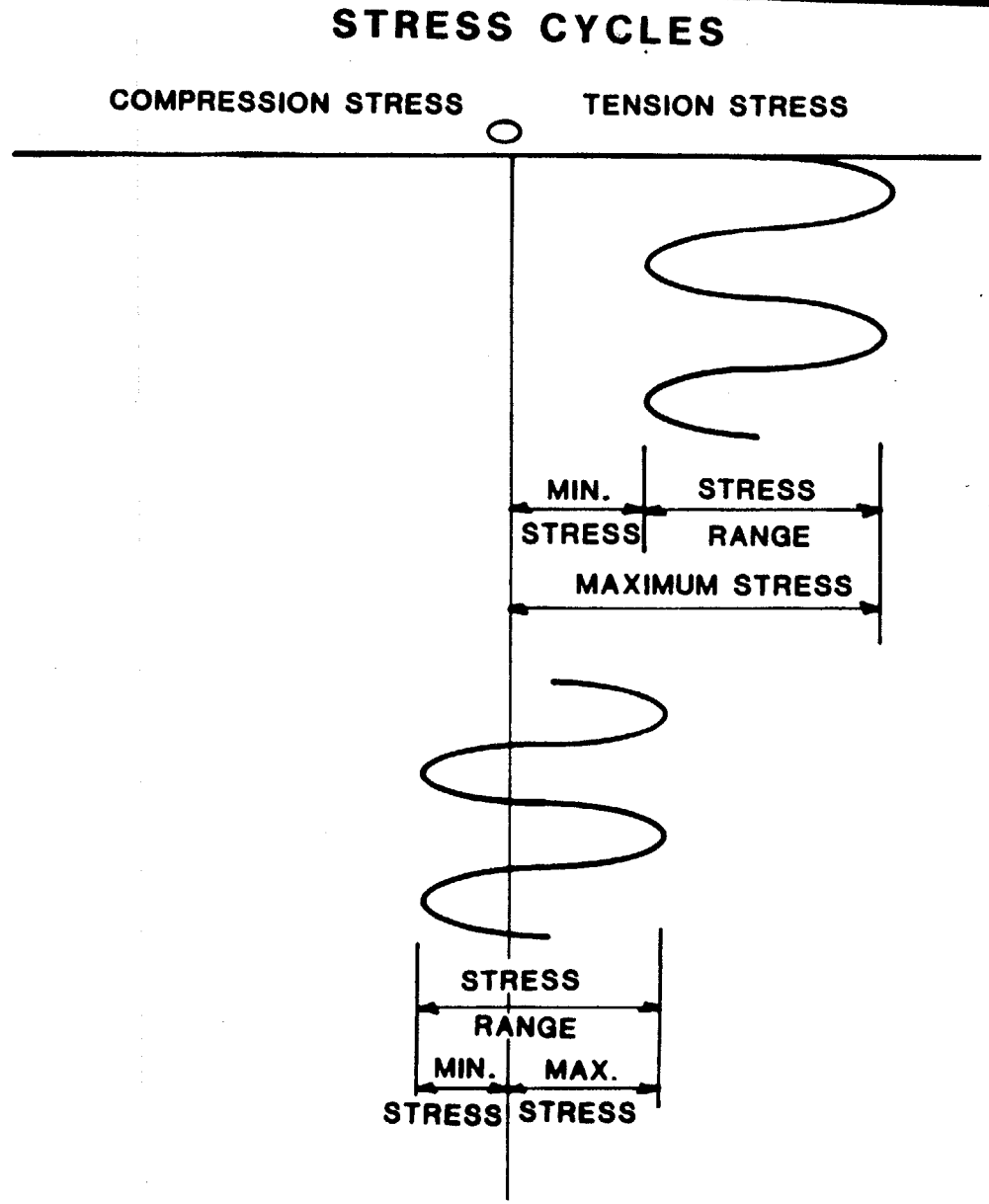

Relation of stress range to maximum stress

Figure 32 illustrates the relationship between the three parameters affecting fatigue crack propagation, namely stress range, number of cycles and type of detail. The figure shows that, as a general rule, Category A details have the longest fatigue life and Category E details have the shortest fatigue lives.

Table 1 classifies the types of details by category. The thoroughness of a fracture critical member inspecton should be in the order of their susceptibility to fatigue crack propagation, namely from the highest (E) to the lowest (A) alphabetical classification.

3.4 Fracture

Fracture of a critical member is the separation of the member into two parts. The fracture of a critical member causes the bridge to collapse.

The fracture can be either brittle or ductile. Brittle fracture occurs without prior plastic deformation, at average stresses below those of general yielding. The fracture surface is flat and has no shear lips along the edges. The bridge collapses with no warning.

Ductile fracture is generally preceded by local plastic deformation of the net uncracked section of the member's cross section. The fracture surfaces have shear lips tilted 45° off the normal plane toward the direction of the applied tensile stress. The plastic deformation, albeit

TABLE 1: CLASSIFICATION OF TYPES OF DETAILS

General Condition	Type of Detail	Stress Category	Illustrative Example (See Figure 33.)
Plain Material	Base metal with rolled or cleaned surfaces. Flame cut edges with ASA smoothness of 1,000 or less.	A	1,2
Built-Up Members	Base metal and weld metal in members without attachments, built-up plates, or shapes connected by continuous full or partial penetration groove welds or by continuous fillet welds parallel to the direction of applied stress.	B	3,4,5,7
	Calculated flexural stress at toe of transverse stiffener welds on girder webs or flanges	C	6
	Base metal at end of partial length welded cover plates having square or tapered ends, with or without welds across the ends		
	(a) Flange thickness < 0.8 in.	E	7
	(b) Flange thickness > 0.8 in.	E′	7
Groove Welds	Base metal and weld metal at full penetration groove welded splices of rolled and welded sections having similar profiles when welds are ground flush and weld soundness established by nondestructive inspection.	B	8, 10, 14
	Base metal and weld metal in or adjacent to full penetration groove welded splices at transitions in width or thickness, with welds ground to provide slopes no steeper than 1 to 2 1/2, with grinding in the direction of applied stress, and weld soundness established by nondestructive inspection.	B	11, 12
	Base metal and weld metal in or adjacent to full penetration groove welded splices, with or without transitions having slopes no greater than 1 to 2 1/2 when reinforcement is not removed and weld soundness is established by nondestructive inspection	C	8, 10, 11, 12, 14
	Base metal at details attached by groove welds subject to longitudinal loading when the detail length, L, parallel to the line of stress is between 2 in. and 12 times the plate thickness but less than 4 in.	D	13
	Base metal at details attached by groove welds subject to longitudinal loading when the detail length, L, is greater than 12 times the plate thickness or greater than 4 inches long.	E	13

TABLE 1: (Continued)

General Condition	Types of Detail	Stress Category	Illustrative Example (See Figure 33.)
	Base metal at details attached by groove welds subjected to transverse and/or longitudinal loading regardless of detail length when weld soundness transverse to the direction of stress is established by nondestructive inspection.		
	(a) When provided with transition radius equal to or greater than 24 in. and weld end ground smooth	B	14
	(b) When provided with transition radius less than 24 in. but not less than 6 in. and weld end ground smooth	C	14
	(c) When provided with transition radius less than 6 in. but not less than 2 in. and weld end ground smooth	D	14
	(d) When provided with transition radius between 0 in. and 2 in.	E	14
Fillet Welded Connections	Base metal at intermittent fillet welds	E	—
	Base metal adjacent to fillet welded attachments with length L, in direction of stress less than 2 in. and stud-type shear connectors	C	13, 15, 16, 17
	Base metal at details attached by fillet welds with detail length, L, in direction of stress between 2 in. and 12 times the plate thickness but less than 4 in.	D	13, 15, 16
	Base metal at attachment details with detail length, L, in direction of stress (length of fillet weld) greater than 12 times the plate thickness or greater than 4 in.	E	7, 9, 13, 16
	Base metal at details attached by fillet welds regardless of length in direction of stress (shear stress on the throat of fillet welds governed by stress category F)		
	(a) When provided with transition radius equal to or greater than 2 in. and weld end ground smooth	D	14
	(b) When provided with transition radius between 0 in. and 2 in.	E	14
Mechanically Fastened Connections	Base metal at gross section of high-strength bolted slip resistant connections, except axially loaded joints which induce out-of-plane bending in connected material.	B	18
	Base metal at net section of high-strength bolted bearing-type connections	B	18
	Base metal at net section of riveted connections	D	18
Fillet Welds	Shear stress on throat of fillet welds	F	9

FIGURE 32

FATIGUE DESIGN LINES FOR STEEL BRIDGE DETAILS

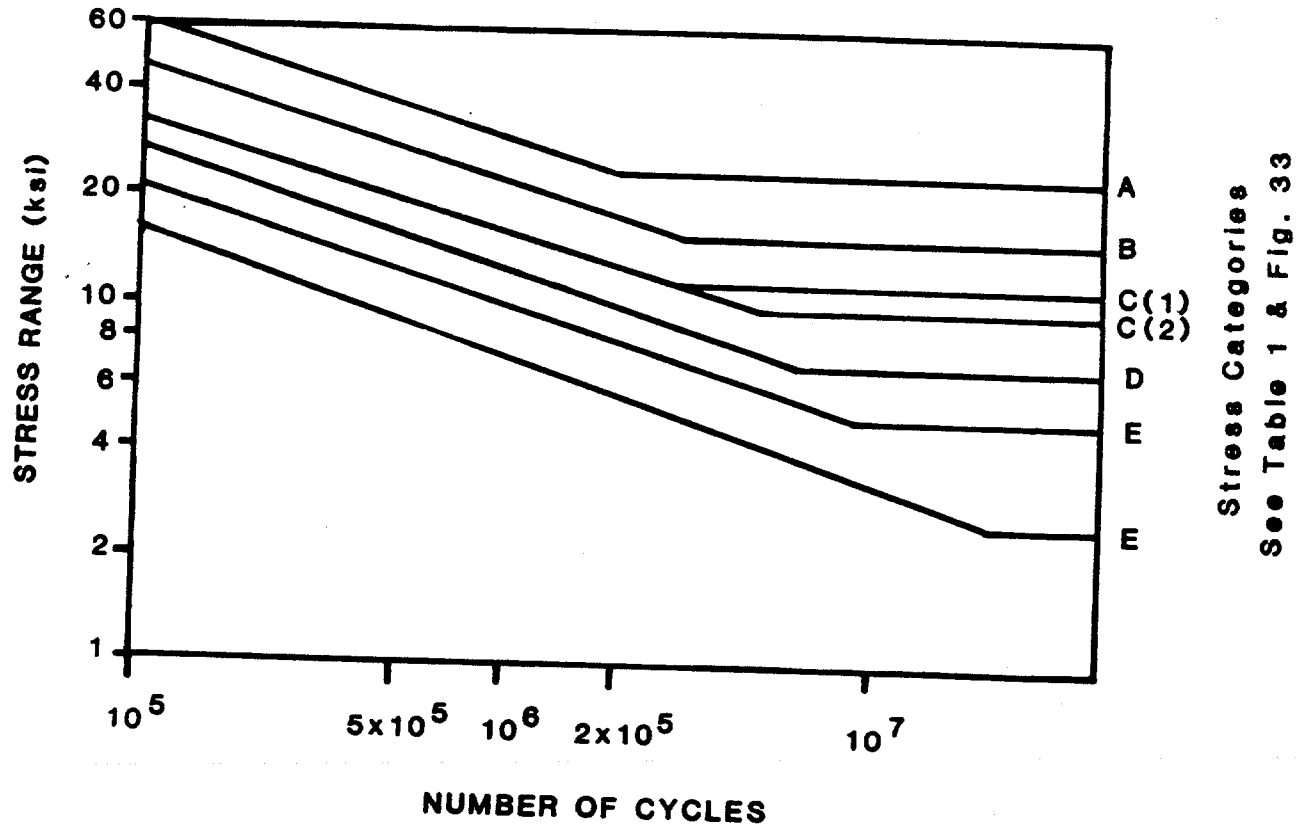

(1) STIFFENERS
(2) OTHER ATTACHMENTS

FIGURE 33

ILLUSTRATIVE EXAMPLES OF TYPES OF DETAILS (SEE TABLE 1)

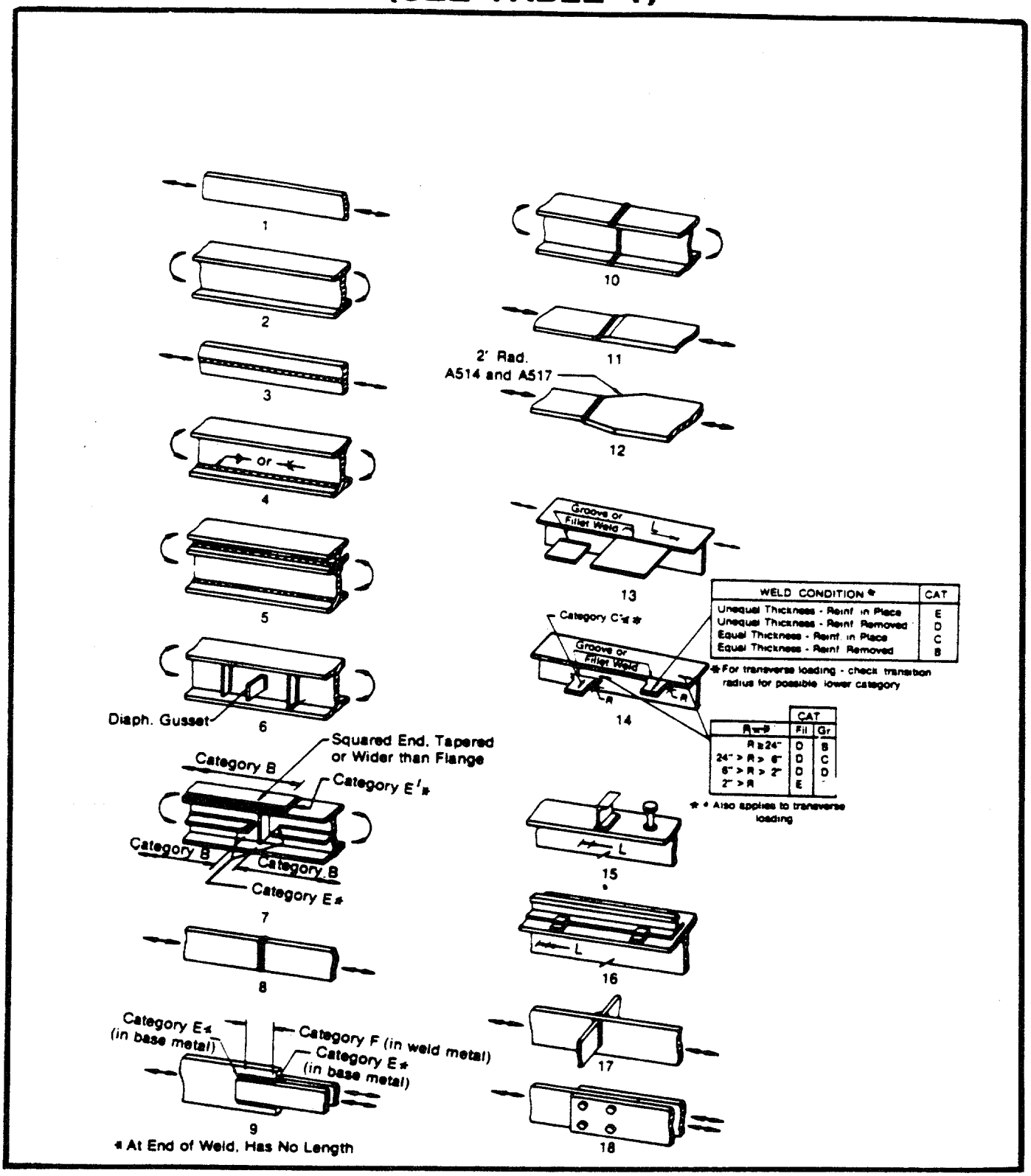

WELD CONDITION *	CAT
Unequal Thickness - Reinf. in Place	E
Unequal Thickness - Reinf. Removed	D
Equal Thickness - Reinf. in Place	C
Equal Thickness - Reinf. Removed	B

* For transverse loading - check transition radius for possible lower category

R = ∅	CAT Fil	CAT Gr
R ≥ 24"	D	B
24" > R > 6"	D	C
6" > R > 2"	D	D
2" > R	E	-

* * Also applies to transverse loading

SOURCE: AASHTO, (1)

local to the cracked section, tends to increase the displacement of the member and gives some visual warning of the impending failure.

The transition between a brittle and ductile type of fracture is greatly affected by the ambient temperature, loading rate, and degree of constraint. Each heat of steel has a transition temperature below which it becomes brittle. Rapid loading of a steel member, as would occur from a truck collision or an explosion, can create sufficient energy to cause a member to fail in brittle fracture. Truck loading will normally stress the member at an intermediate rate which will not create a high energy level. Variations in the speed at which a truck crosses the bridge do not significantly alter the rate of loading. Thick welded plates or complex joints can produce a high degree of constraint that will limit the steel's ability to deform plastically. The adverse combination of the three factors - cold temperature, rapid loading, and high constraint - greatly enhances the likelihood of a brittle fracture. Conversely, a warm ambient temperature, normal truck loading, and low constraint allow for some plastic deformation, leading to a ductile mode of fracture. The transition is a matter of degree. In either case, when it occurs, the fracture of a critical member is sudden and catastrophic.

The fracture toughness is a measure of the material's resistance to crack extension and can be defined as the ability to carry load and to absorb energy in the presence of a crack. Like the previously discussed brittle-to-ductile fracture transition, the fracture toughness varies with temperature, loading rate, and degree of constraint. In general, a steel

with low toughness may experience a brittle failure when one or more of the following conditions are met: (1) the temperature is low, (2) the structure is rapidly loaded, and (3) the member is thick. Conversely, for a steel with higher toughness the fracture becomes increasingly ductile when: (1) the temperature is higher,(2) the loading rate slower, and (3) the member is thinner. Trucks crossing a bridge stress the steel at rates intermediate between those of slow and rapid loading. Therefore, with actual bridges in service, the toughness of the steel is primarily a function of temperature and constraint. In general, thick welded members made of steel with low toughness are more likely to fracture in cold days.

The susceptibility to fracture at a given temperature is determined by three factors: crack size, applied tensile stress, and fracture toughness. They are related as shown in Figure 34. Given a steel of specified toughness, many different combinations of crack size and tensile stress, represented by the solid curve, can produce a critical condition resulting in fracture of the member. Points below the curve represent safe combinations of crack size and stress, whereas points above the curve are in the fracture zone, meaning that the resistance to fracture is exceeded. Tough steels can resist longer cracks at higher tensile stresses.

FIGURE 34
ILLUSTRATION OF FRACTURE PARAMETERS

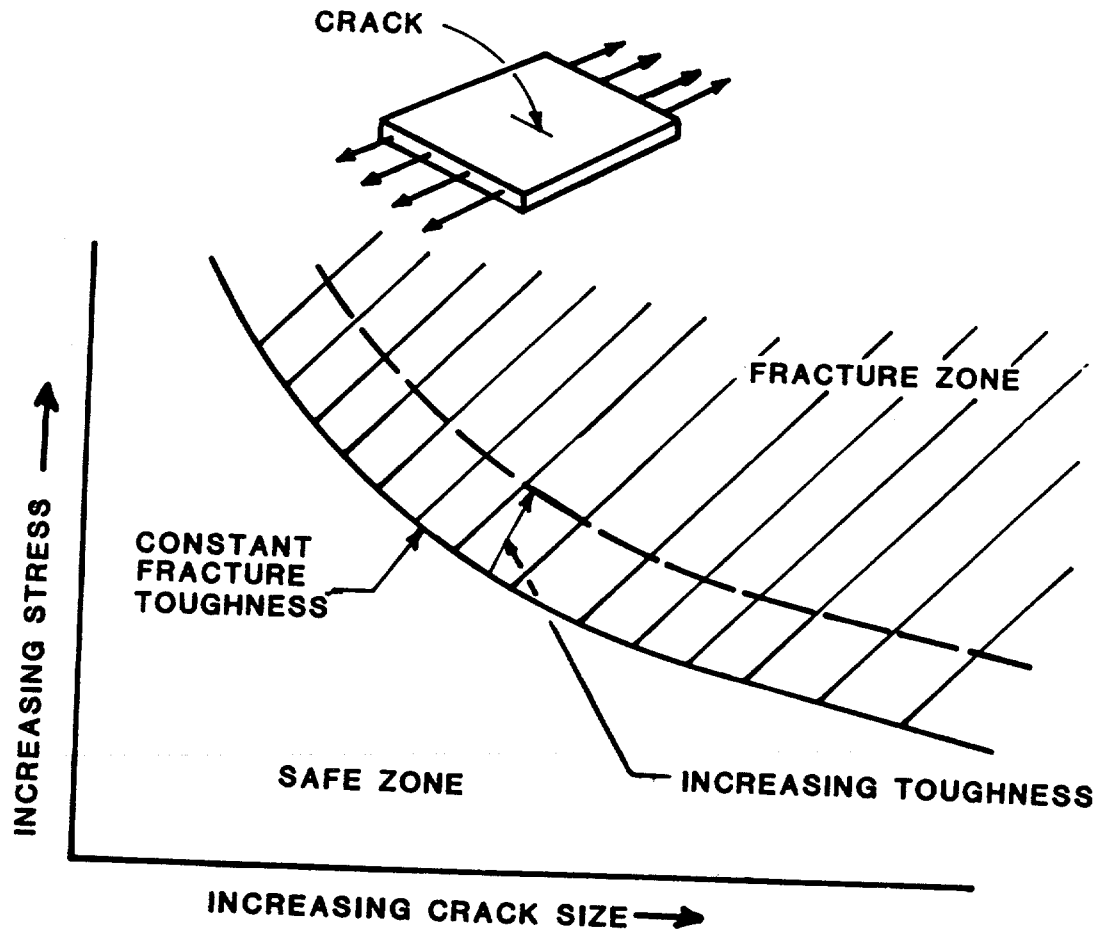

Relations between stress, cracksize and toughness

CHAPTER 4

INSPECTION PROCEDURES

Section 1. CATEGORIZE BRIDGES

4-1.1 General.

Chapter 2 of this manual provides guidelines for identifying bridges that warrant special attention due to fracture critical members. Using these guidelines, an engineer should evaluate the bridges to identify structures that require fracture critical inspection. For most agencies this is a refinement rather than a change in the existing procedures. Once a FCM is identified in a given structure, the information should become a part of the permanent record file. Its condition should be noted and documented on every subsequent inspection.

Using the strict definition for a FCM provided in Chapter 2, only a small percentage of structures qualify for fracture critical inspection. Ideally, the level of inspection should be tailored to be appropriate for each bridge depending on the degree of criticality. To achieve this ideal requires that bridges be categorized and ranked in order of criticality so that the resources available for the inspections are used to provide the highest degree of safety.

The following is an example of how different structural systems might be placed in a suggested order of criticality, with the most critical placed first. Since this manual is focused on the identification, classification, and inspection of bridges with FCMs, the categorization guidelines will be limited accordingly.

a. Two Girder System (1. Single Span, 2. End Span of Continuous Span Units)

1. With fixed hanger suspended spans
2. With suspended spans
3. Welded plate girders
4. Riveted or bolted plate girders

b. Truss System (1. Simple Spans, 2. Continuous Spans)

1. Eyebar trusses
2. Welded trusses
3. Trusses with suspended spans
4. Riveted trusses

c. Suspension Bridges

1. Eyebar chains
2. Cables

d. Tied Arches

1. Two welded box ties
2. Two riveted box ties

e. Steel Pier Caps

1. Welded box or plate girders
2. Riveted plate girders

f. Longitudinal Box Beams

1. Single welded box
2. Single riveted or bolted box

The evaluation to identify and rank bridges with FCMs and determine the degree of criticality must be made by a structural engineer with experience in load rating and evaluating the types of bridges being considered. Among the several things that influence the relative criticality are:

- The degree of redundancy
- The live load member stress
- The propensity of the material to crack or fracture
- The condition of specific FCMs
- The existence of fatigue prone design details
- The previous and predicted number and size of loads

4-1.2 The Degree of Redundancy.

Redundancy is discussed in Chapter 2. The three types -- Load Path, Structural, and Internal Redundancy -- should be considered carefully in determining priority of inspection.

4-1.3 The Live Load Member Stress.

The range of live load stress in fracture critical members influences the formation of cracks as described in Chapter 3. Fatigue is more likely when the live load stress range is a large portion of the total stress on the member.

The reserve strength in a member under maximum live load stress is a factor to be considered in evaluating fracture critical members. On many older truss bridges, the posting is controlled by a redundant floor system. The stress in the truss FCMs under maximum live load may be considerably below the allowable operating stress level and the FCM is still functioning at a low stress level when the structure is loaded to its posted maximum.

4-1.4 The Propensity of the Material to Crack or Fracture.

Material toughness was explained in Chapter 3. FCMs designed since 1978 by AASHTO standards are made of steel meeting minimum toughness requirements. On older bridges, coupon tests may be used to provide this

information. If testing is not feasible, the age of the structure can be used to estimate the steel type which will indicate a general level of steel toughness.

Welding, overheating, overstress, or member distortion resulting from collision may adversely affect the toughness of the steel. FCMs that are known or suspected to have been damaged should receive a high priority during the inspection, and more sophisticated testing may be warranted.

4-1.5 The Condition of FCMs

A bridge that receives proper maintenance, including pressure washing to remove debris and deicing salt from beneath joints and other exposed areas, normally requires less time to inspect. These contaminants cause corrosion of the steel which results in a reduced section and stress concentration. Debris and rust also increase friction which can freeze two steel surfaces together, and critical stresses in components such as pins or hanger bars can result. Flaws are possible anywhere, and problems are more difficult to detect on members covered with rust and debris. Members may be damaged or overstressed during erection or transport. They may also be damaged while in service by a variety of causes such as floods, ice build-up or vehicular collision. All these things increase the time required to make the inspection. Bridges with FCMs in poor condition should be inspected at more frequent intervals than those in good condition.

4-1.6 The Existence of Fatigue Prone Design Details.

Certain design details have proven to be more susceptible to fatigue cracking. Chapter 3 provides useful information on fatigue categories. That information is useful to determine which details on a fracture critical member should be scrutinized during the inspection. It is essential that the inspector of FCMs be provided detailed information by the engineer on the specific location and the criticality of the details where the cracks may begin.

4-1.7 The Previous and Predicted Number and Size of Loads

Repeated heavy loading is a consideration in determining the appropriate level of inspection. While this is not an exact science and new bridges have developed fatigue cracks, the longer the bridge has been in service with a high volume of heavy loads, the greater the risk. When the precise number of loads experienced is not available, the location and the age is normally sufficient information to enable someone familiar with traffic in the area to make a reasonable estimate. The normal level of loading for a structure and the stresses produced by this loading is helpful in performing an inspection centered on finding fatigue cracks.

Section 2. PLANNING THE FCM INSPECTION

4-2.1 General.

The purpose of the inspection plan is to identify unique requirements of a specific bridge. If the bridge is small and not complex, the inspection plan may consist of only routine procedures except that the FCMs are given special attention to reflect their criticality. Large complex structures often require considerable preparation and coordination to accomplish the FC inspection.

There are two types of inspection available to the bridge inspector. The first type is close-up, hands-on inspection using standard, readily available tools, and the second type uses more sophisticated nondestructive testing methods that sometimes require specialized training.

Each type of inspection is appropriate for a given circumstance. Decisions regarding the type of inspection to be accomplished should be made in the office by the engineer before field operations are started and may still need to be modified in the field based upon inspection findings.

In many circumstances, in particular on the larger structures, much of the field time may be spent setting up traffic control and getting close to the area in question. Substantial time may be necessary to clean portions of members before the actual inspection can be made.

4-2.2 Schedule.

There are reasons to schedule the inspection at a particular time of the year. Brittle fracture often occurs during periods of cold weather. On some bridges the water level makes accessibility difficult during certain seasons, particularly during the spring thaw. Seasonal traffic conditions may affect accessibility. The FC inspection should be scheduled to achieve optimum results. It is normally necessary to prepare the schedule well in advance to coordinate special equipment and support personnel. Scheduling is not only dependent upon weather conditions and traffic conditions, but also on the condition of the bridge itself, especially where an FCM is present.

4-2.3 Access Equipment.

Most cracks found in steel bridges are first detected by visual inspection. To accomplish this, a close, hands-on inspection is required. This can be accomplished using ladders or by climbing. However, the more difficult locations require special access equipment in order to provide the appropriate level of inspection. Special equipment allows the inspector to free his hands and perform a full 360° inspection. Few inspectors are effective if they must make the examination in a contorted or insecure position.

There are a number of articulated hydraulic platforms mounted on trucks that can be used to inspect the bridge framing systems. These trucks, as shown in Figures 34, 35, and 36, operate from the bridge deck and are useful for inspection of bridge superstructures. Aerial work platforms, Figures 37 and 38, are not usually articulated and can be operated from bridge decks to reach high truss members or from the ground below, terrain permitting, to reach members beneath the deck but high above the ground. Both motorized and manually operated hoists can be attached to beam flanges with rollers to facilitate movement along the flange. Scaffolding and staging have been designed specifically for bridge use. Over large bodies of water a boat or barge may be necessary The selection of equipment normally evolves after considering cost, efficiency, and availability. The use of special access equipment may require additional support personnel, traffic control and operators. Bridge design engineers should ensure that easy and adequate access can be achieved, especially to fatigue prone details and FCMs. New designs, as well as major rehabilitation work, should include permanent provisions such as inspection walkways to minimize the need for deck located motorized equipment.

FIGURE 35

TRAFFIC CONTROL

Typical traffic congestion caused by blocking one lane.

FIGURE 36

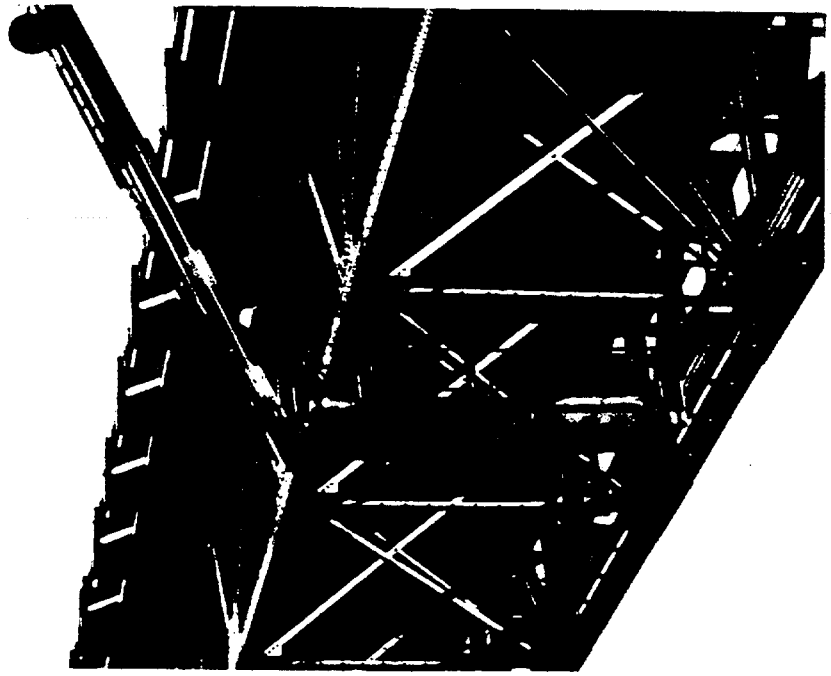

ACCESSIBILITY

Use of Snooper Under Deck Truss

FIGURE 37
MANLIFT

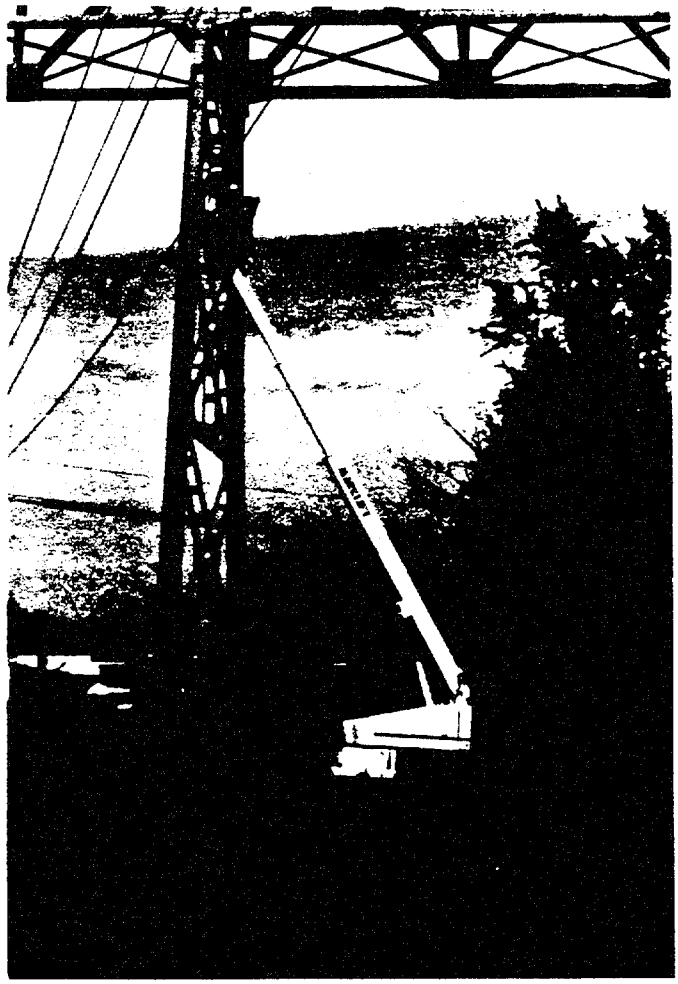

Used from ground surface to inspect tower

FIGURE 38
MANLIFT

Used from bridge deck to inspect through

Truss

There are several factors that must be considered in planning the use of mobile access equipment for the inspection of FCMs. These factors include:

- Availability. Agencies with only a few bridges requiring the use of special access equipment will likely not own the truck-mounted rigs. The equipment can be rented from equipment rental companies, paint contractors, or larger transportation agencies. Under these circumstances the inspection must be scheduled to coincide with the availability of the equipment.

- Geometrical limitations. Certain features on or around a bridge may prohibit or restrict the use of access equipment. For example, it is often difficult to inspect below the deck of a through truss with a rig that operates from the deck. Adjacent structures, power lines, or trees may also create problems. On bridges with limited horizontal clearance the equipment may prevent passage of other vehicles. Very wide roadways, skews and deep superstructures also limit the effectiveness of certain equipment. The person planning the inspection must be familiar with the geometry of each bridge and the limitations of the equipment.

- Weight restrictions. If the bridge to be inspected is posted, some access equipment may exceed the weight restrictions. It may be necessary to examine the structural analysis calculations

to determine if the equipment can be used safely. If the unit has outriggers, there is the possibility that they will damage the deck or wearing surface due to the concentrated load. Steel plates may be necessary under the outrigger if this is a problem.

- Grade and superelevation. On many of the mobile units the vehicle must be reasonably level or there is a danger of overturning when the boom is extended. The operating instructions for the equipment used should be rigorously observed.

- Traffic control. The use of truck-mounted access equipment may require the closure of traffic lanes on the bridge. The Manual of Uniform Traffic Control Devices provides the minimum requirements to control the traffic for different types of highways. If the bridge is located in a congested area with ramps at either end, additional control will be necessary. The requirements should be determined by the engineer as part of the FC inspection planning, and arrangements made to have the necessary control devices and manpower available when the inspection equipment arrives at the site.

4-2.4 Manpower.

The inspection of a bridge containing FCMs involves considerable expense to the owner of the structure. It is important that the inspection be

performed efficiently to ensure that the time required is minimized. On a large bridge requiring expensive access equipment and traffic control, careful planning and coordination is necessary to accomplish this. This may require combining more than one inspection team and acquiring additional support personnel so that the equipment is used efficiently.

4-2.5 Tools.

The most commonly used inspection method is the relatively elementary, but very practical, visual inspection. Therefore, a properly trained human eye will be the first and foremost tool in FCM inspection. There are, however, many standard and not so standard tools or equipment that can aid and assist the eye in discovering and quantifying cracks in FCMs.

Standard tools include such items as chipping hammer, scraper, wire brush, pocket knife, feeler gauges, folding rules, flashlights, a 10-power magnifying glass, camera, a punch and other similar type tools usually found with a normal inspection team. A ladder to access hard-to-reach spots will be necessary. These tools should be self-explanatory and will not be elaborated on here. They cannot, however, be considered as suitable for the detection of hidden cracks. Other specialized tools are discussed in Section 5 of this chapter.

Section 3. THE FCM FIELD INSPECTION

4-3.1 Review File.

Section 1 of this chapter provides important factors necessary for assessing the criticality of a bridge with FCMs. Potential fatigue-prone areas should be identified and noted in the inspection file so they can be monitored closely on each inspection. Many agencies regularly update the inspection file to provide details regarding accidents or repairs related to the bridge. It is important that each inspector has this information as he evaluates the structure. The team leader should review the file and inform team members of potential problems related to their area of responsibility.

4-3.2 Assign Duties.

Assigning specific duties on the FCM inspection is particularly important because no part or aspect of the FCM should be neglected. Obviously on inspections made by a two person team which works together routinely, this is not an important consideration. When there are individuals involved who do not routinely work together, the person in charge must ensure that all parts of the FCM receive appropriate attention and that the data is collected in a format that can be combined into an accurate report.

4-3.3 Where to Look.

The danger of emphasizing parts of a FCM where problems are more likely to occur is that the remainder of the member may be ignored during the inspection. Care should therefore be taken to assure that the remainder of the structure and/or member is inspected thoroughly.

An understanding of how cracks develop is a valuable tool for the bridge inspector. A member damaged by mishandling or collision will normally exhibit evidence that can be seen easily by the trained eye. This is not the case with fatigue cracks. It is important that the inspector focus his eye and attention directly on fatigue prone areas of the FCMs. The use of a wire brush and magnifying glass is mandatory. Dye penetrant procedures may be used and special crack detection devices may be warranted in high risk situations or when the inspector is in doubt. On bridges where fatigue cracks are discovered, it is important for the inspector to proceed immediately to reinspect other similar details.

a. Areas Especially Vulnerable To Corrosion. Moisture serves as an electrolyte facilitating the absorption of oxygen into metal ions. The metal ions form rust as they separate from the surface, and the rust expands in volume as the thickness of the original plate is reduced. Deicing salts increase the acidity of the electrolyte and accelerate the corrosion process which is normally most severe at

locations where the moisture is trapped against the surface of the steel and where drying is slow, such as debris deposits. Locations that are typical problem areas are:

- Under deck joints
- In the areas of scuppers and drain pipes
- Under open steel grating
- On flat surfaces where debris accumulates
- On exposed surfaces of facia members
- In steel in contact with concrete
- At overlapping steel plates
- Corners of steel angles and channels

A bridge that exhibits severe active corrosion or evidence of past severe corrosion requires special evaluation during the FC inspection. Corrosion indicates a loss of the original steel section. The maximum capacity of the member has therefore decreased at the location of the corrosion. It is important that the inspector determine the amount and the exact location of section loss to permit assessment of the damage and a revised capacity analysis by a structural engineer if necessary.

Corrosion may also precipitate fatigue problems. Section loss creates a discontinuity in the member and any sudden change in the cross section of a member causes stress concentration. In this

situation, stresses within the normal permissible range may cause cracking and fracture of the member. The corrosion build-up will also make it more difficult to detect fine cracks.

Another problem caused by rust build-up is that oxidized metal occupies more space than the original and increases friction between moving surfaces. This tends to freeze in place parts that were designed to rotate or slide with the expansion and contraction of the bridge. If this happens in a pin and hanger assembly, critical strain may be placed on either the pin or the hanger bar. Corrosion build up on movable parts such as an expansion hanger of a FCM bridge element warrants immediate attention.

b. Field Welds. Welded members represent a higher risk of failure than riveted or bolted members. Welded connections are less forgiving. If plans are available, they may indicate the extent of the field welds. Any nonuniform weld, or welds with unusual profile, should be suspect.

There is a greater degree of uncertainty involved in the quality of field welding as compared to shop welding since quality control in the shop is normally significantly higher. In the shop, the members may be positioned to optimize their accessibility, thus simplifying the welding operation. The inspectors should be wary of all welds,

but more particularly those known to be field welds commonly used in bridges built in the early 1950s and those joining fracture critical members.

Flaws in the weld increase the strain on the fibers at isolated points that then become prone to crack initiation. When crack initiation begins in a built-up welded member it can propagate through the total section unless the strain is relieved or it is intercepted by tougher material. On riveted or bolted members the crack normally stops where the plates or sections are joined.

It should also be emphasized that when field welds are made which were not indicated on the plans, such welds should be suspect because they may have been made using improper welding techniques. For example, tack welds used to hold a member in position have initiated cracks in the member. Many old truss bridges have plates welded to FC members with no record of who designed or performed the repair. Any weld to a FCM that was not part of the original design should be documented and brought to the attention of a structural engineer.

A specific example of suspect welding (field or shop) is a plug weld. When unnecessary holes are inadvertently drilled in members, they are sometimes filled with weld metal in the field or shop. Figure 39 shows a typical crack which can form in such a situation. In this example, the weld in the holes has greater probability for low toughness and possible defects.

FIGURE 39

WELD FILLED HOLES

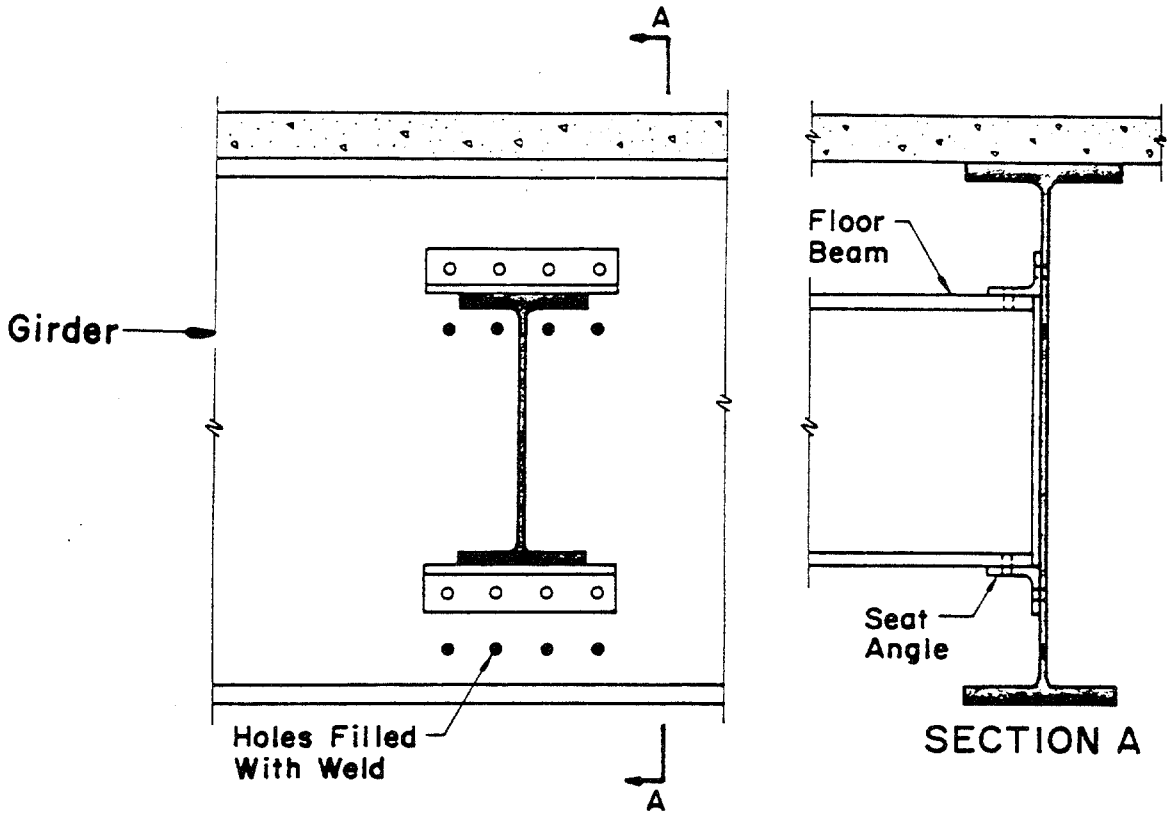

Schematic Showing Misplaced Holes Filled with Weld

Cracking from Weld Filled Holes

Source: Fisher, (23)

c. Sudden Changes in Cross Section. A part of the designer's function is to minimize the cost of a structure. In the past the best design was often considered to be the one requiring the smallest quantity of material. Since a simply supported steel beam is stressed more at midspan than at the ends, a design that minimized the amount of steel required changes the section rather than maintaining a constant section from end to end. This is accomplished with one or more abrupt changes in the section of the beam similar to that shown in Figures 40 and 41. These changes in section may become focal points for fatigue damage. Cracks normally initiate in the tension flange, at the point where the section changes, and propagate into the weaker section.

Figure 42 shows various cover plate end treatments. The termination point of welded cover plates is a common location for the initiation and development of cracks. The fatigue problems associated with a sudden change in section are combined with the residual stress that accumulates at the end of a welded plate and the undesirable practice of welding across the tension flange.

FIGURE 40

FLANGE AND WEB SPLICES

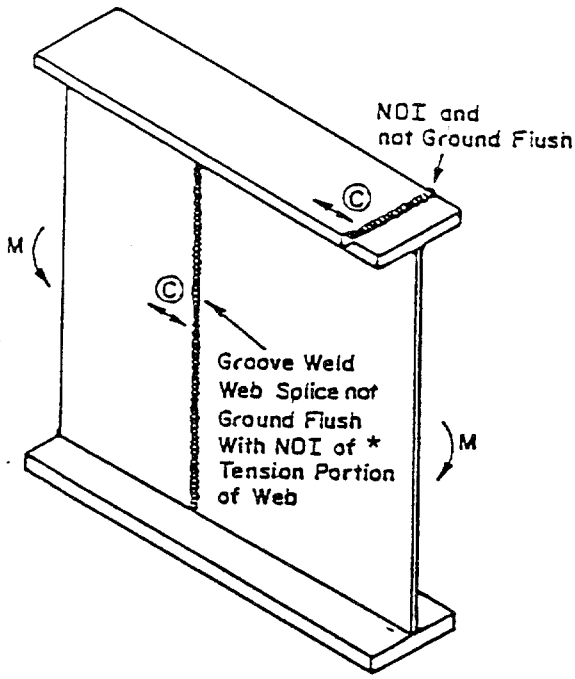

* - Weld Soundness
- Established By
Nondestinctive Testing

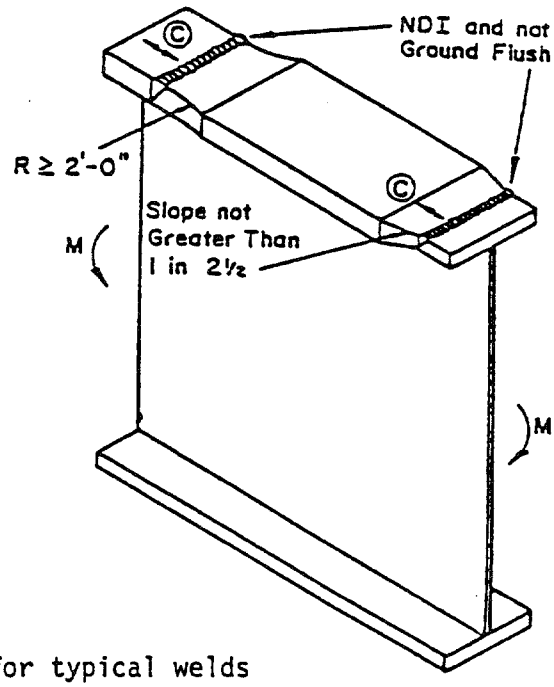

Stress categories for typical welds

Source: Fisher, (23)

FIGURE 41
FLANGE SPLICE

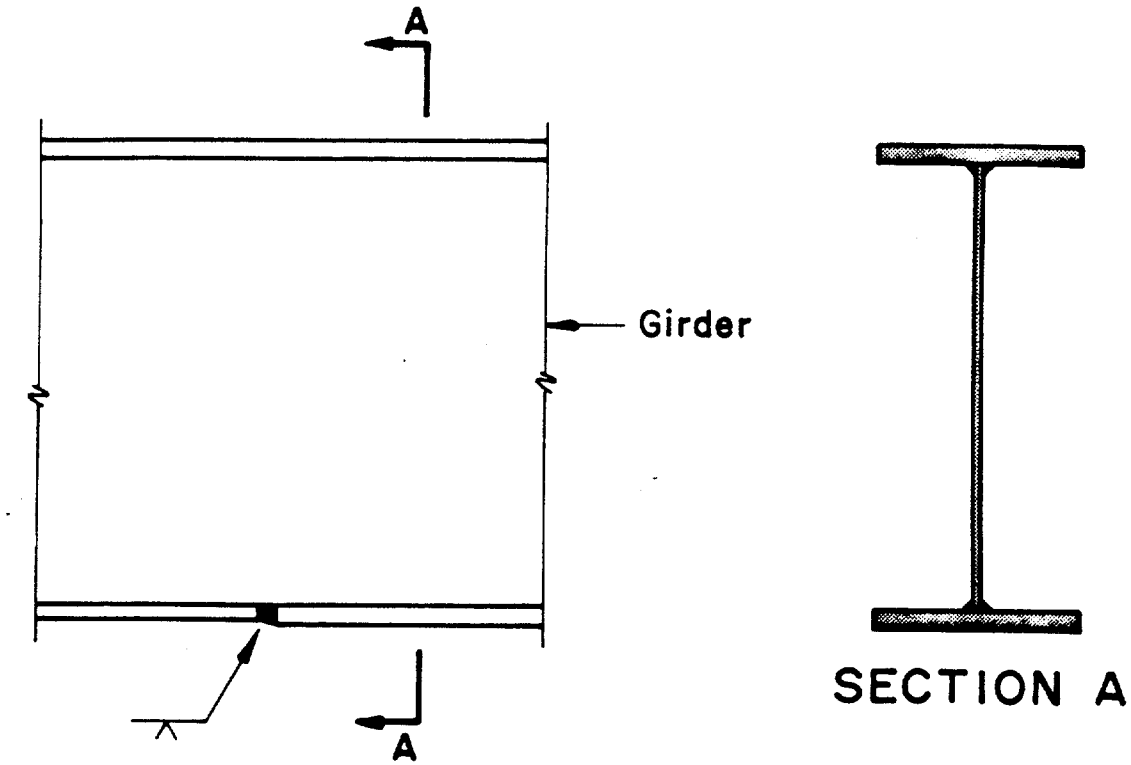

Schematic of Butt Weld Transition

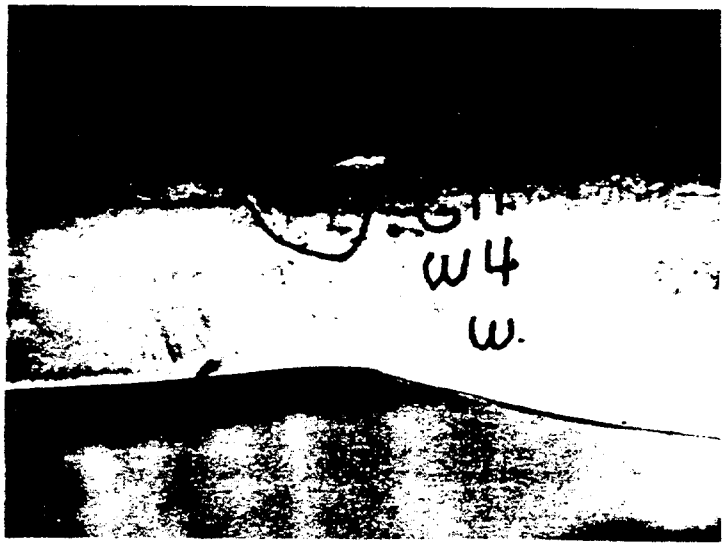

Crack in Ground Edge of Flange
at Electroslag Weldment

Source: Fisher, (23)

FIGURE 42

CRACK PROPAGATION AT COVER PLATE ENDS

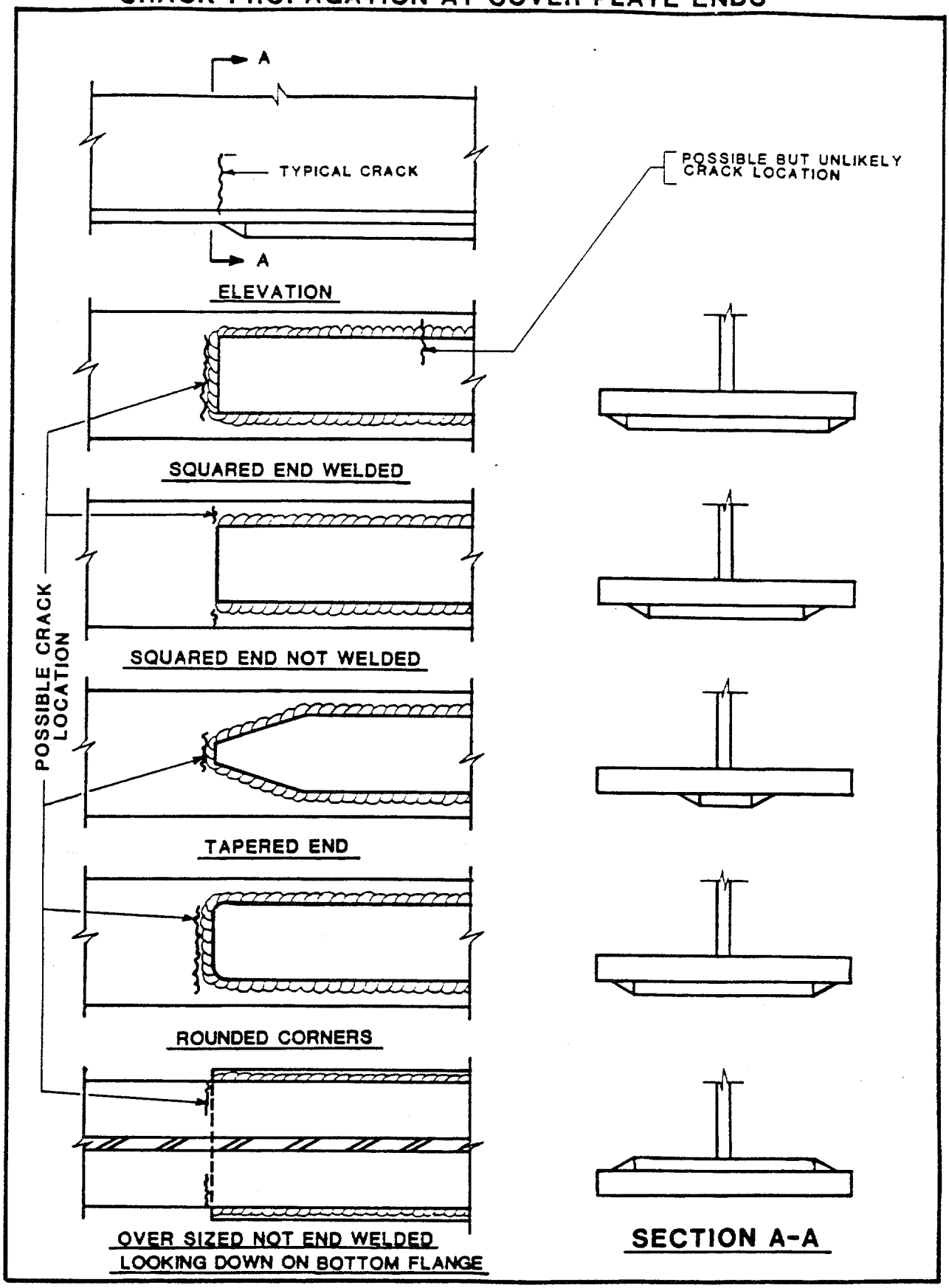

With the following exceptions, all cover plate details have the same basic fatigue strength. Flanges over 0.8 inches in thickness are more susceptible to fatigue cracking than thinner flanges and are classified as category E'. Cover plates which are wider than the flange that they are attached to and not welded across their ends, as shown in Figure 43, are also more susceptible to fatigue damage than cover plates which are narrower than the flange.

Cracks can also occur along the length of the cover plate weld. However, these locations have a higher fatigue strength (category B) and fatigue cracks are less likely to occur unless there is a serious welding defect included in the fabricated beam. Intermittent welds should be examined carefully because the end of each weld is similar, from a stress concentration point of view, to the end of a continuous weld as illustrated in Figure 44.

Insert plates are sometimes used to vary the depth of a girder as shown in Figure 45. The web splice may contain a vertical weld which is subject to crack development similar to that found in a full width web splice. Insert plates usually require very short vertical welds and as a result high quality welds are extremely difficult to obtain and internal inclusions may cause crack initiation after only a short time in service. In some cases, the weld is ground flush only on the fascia side of the exterior beam.

FIGURE 43

COVER PLATE WITHOUT TRANSVERSE WELD

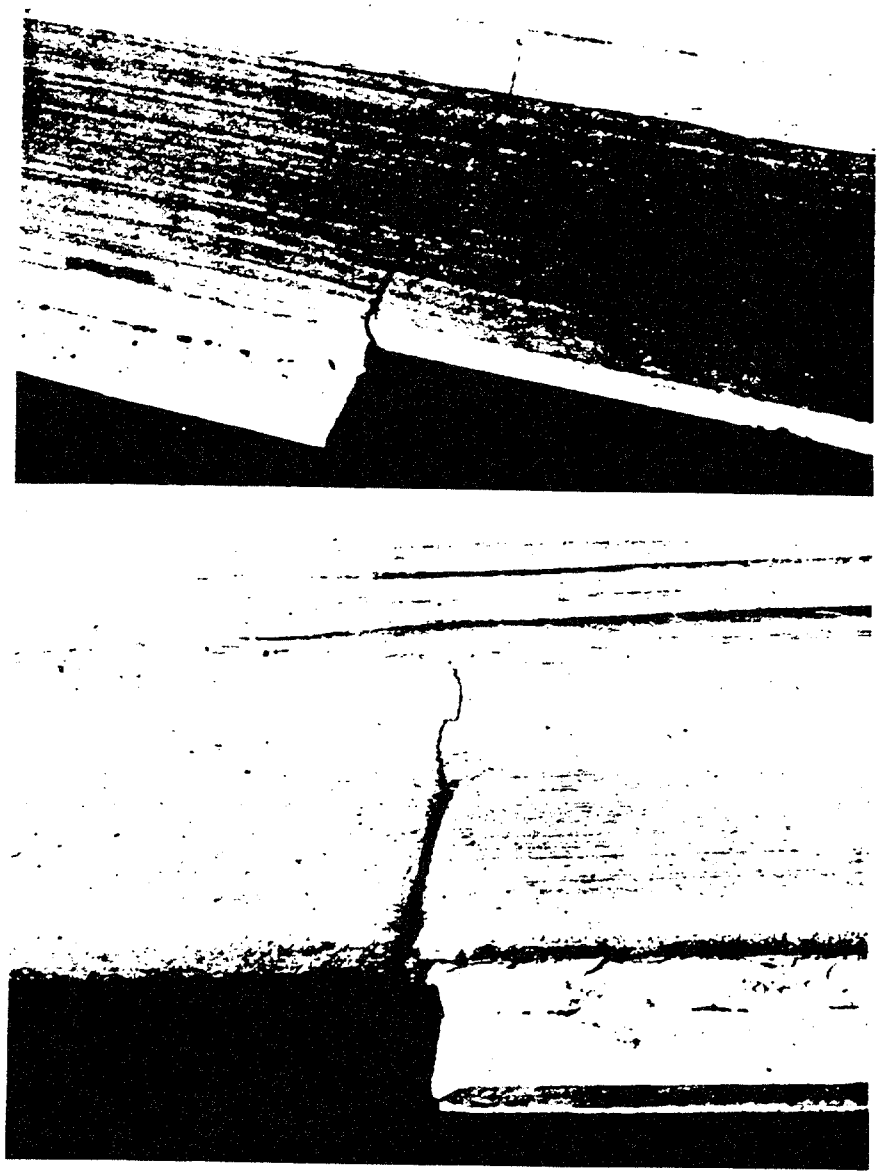

Typical fatigue cracks at the ends of cover plates

Source: Fisher, (27)

FIGURE 44
INTERMITTENT WELDS

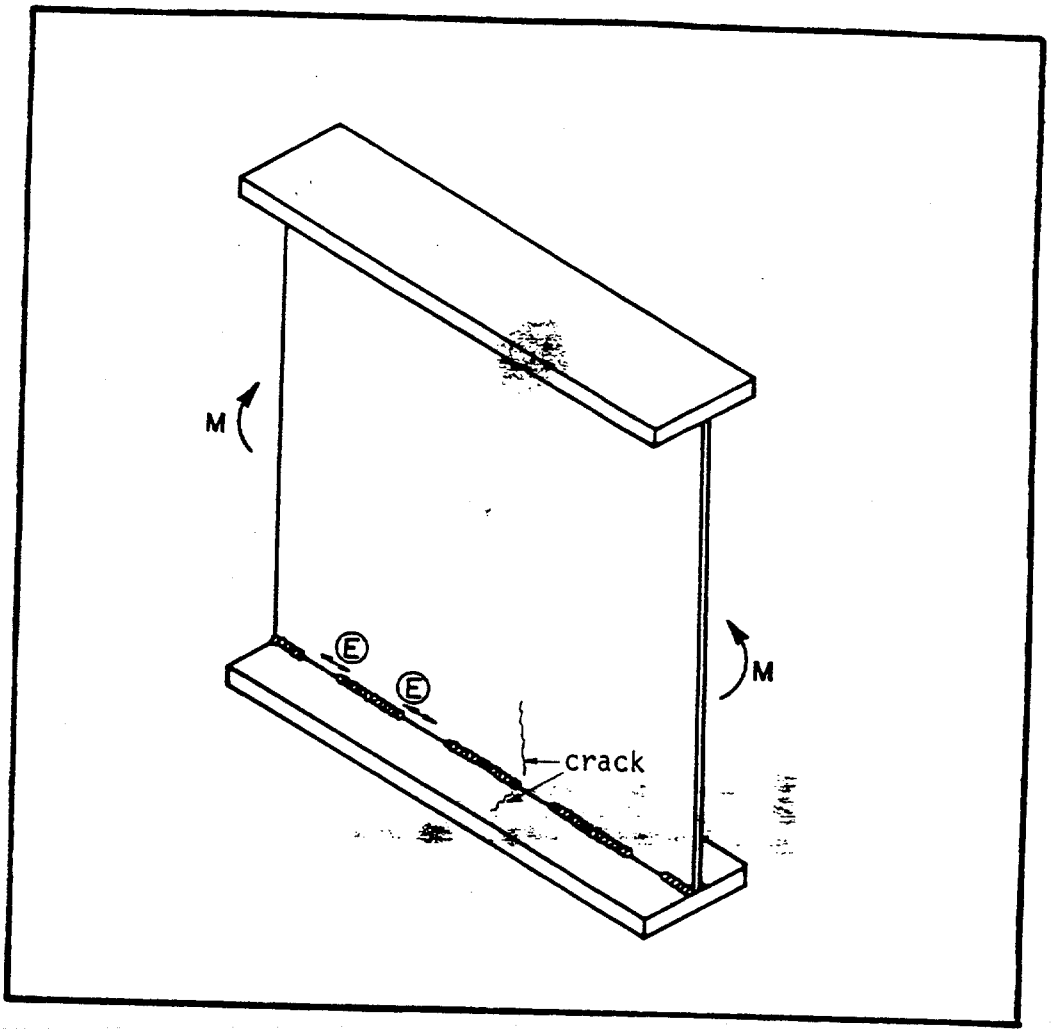

Stress categories

Source: Fisher, (23)

FIGURE 45
INSERT PLATES

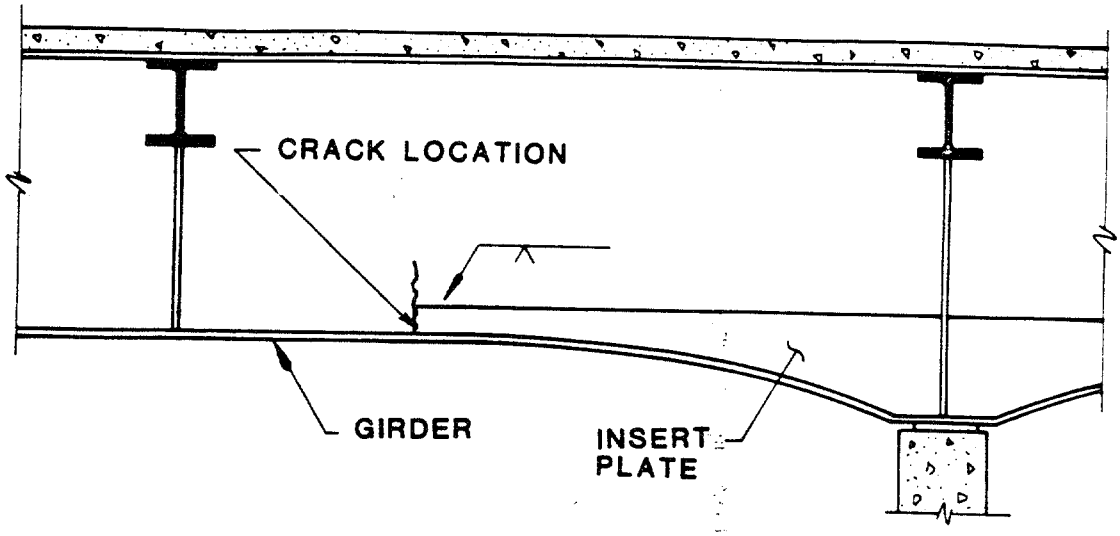

Welded Insert Plate Showing Short Length of Transverse Groove Weld in Web

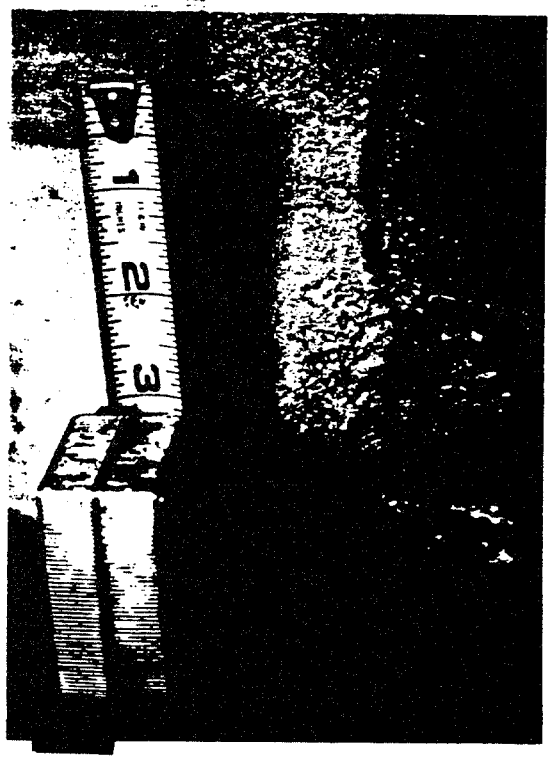

Crack Developed in Transverse Web Groove Weld

Source: Fisher, (23)

Cracks may initiate in the flange or vertical web weld, propagate through the width of the flange and up the web. In Figure 45 the crack has grown through the splice height and started up through the web.

d. Stress Risers. The term stress riser covers virtually all of the geometrical conditions that are prone to fatigue cracking. It is used here to group together the smaller discontinuities in the steel member that create a concentration of stress. Any nicks or scars in a tension member are stress risers that may result in the development of cracks. If the area around the hole is aggravated through prying action by a loosened rivet or bolt, the potential of cracking is also increased. Any flaw or irregularity in a weld, such as irregular weld profile, lack of union or undercut area in the base metal, may create a stress riser. Stress risers in FCMs should be documented and closely monitored during future inspections.

e. Displacement Induced Stresses. Load carrying members framed together in a bridge produce secondary stresses or distortion at connections in adjacent members due to relative displacement. AASHTO Fracture Control Plan states that "any attachment having a length in the direction of the tensile stress greater than four inches, that is welded to the tension area of a component of an

FCM, shall be considered part of the tension component and, therefore, shall be 'fracture critical.'" Therefore, the bracing members or connections attached to fracture critical members into which the induced cracks may propagate are included in this manual.

The magnitude of this out-of-plane movement depends on the relative stiffness of the members, the spacing (of the members), the bridge skew and the type of framing details. The problem occurs in situations where two or more members are connected together and one deflects more under load or in a different plane than the other. One member then tends to twist the other out of its normal plane of deflection.

The location of the cracks depends on how and where the connection to the member is made. The critical element in the location of the cracks is the restraint of the primary girder flanges. This restraint is developed at the top flange by the deck and at the bottom flange by the shoes and lateral bracing connections. The most common location is in the tension portion of the web of girders where movement is restricted to a small space as shown in Figure 46. This same problem has occurred at the ends of intermediate diaphragms in box girders and where floor beams are connected to the tie member in tied arches. Two girder systems are more susceptible to this problem since they do not have the rigidity provided by multi-girder framing. The likelihood of cracking is reduced when the stiffener is attached to the flange.

FIGURE 46
FLOORBEAM CONNECTION PLATES

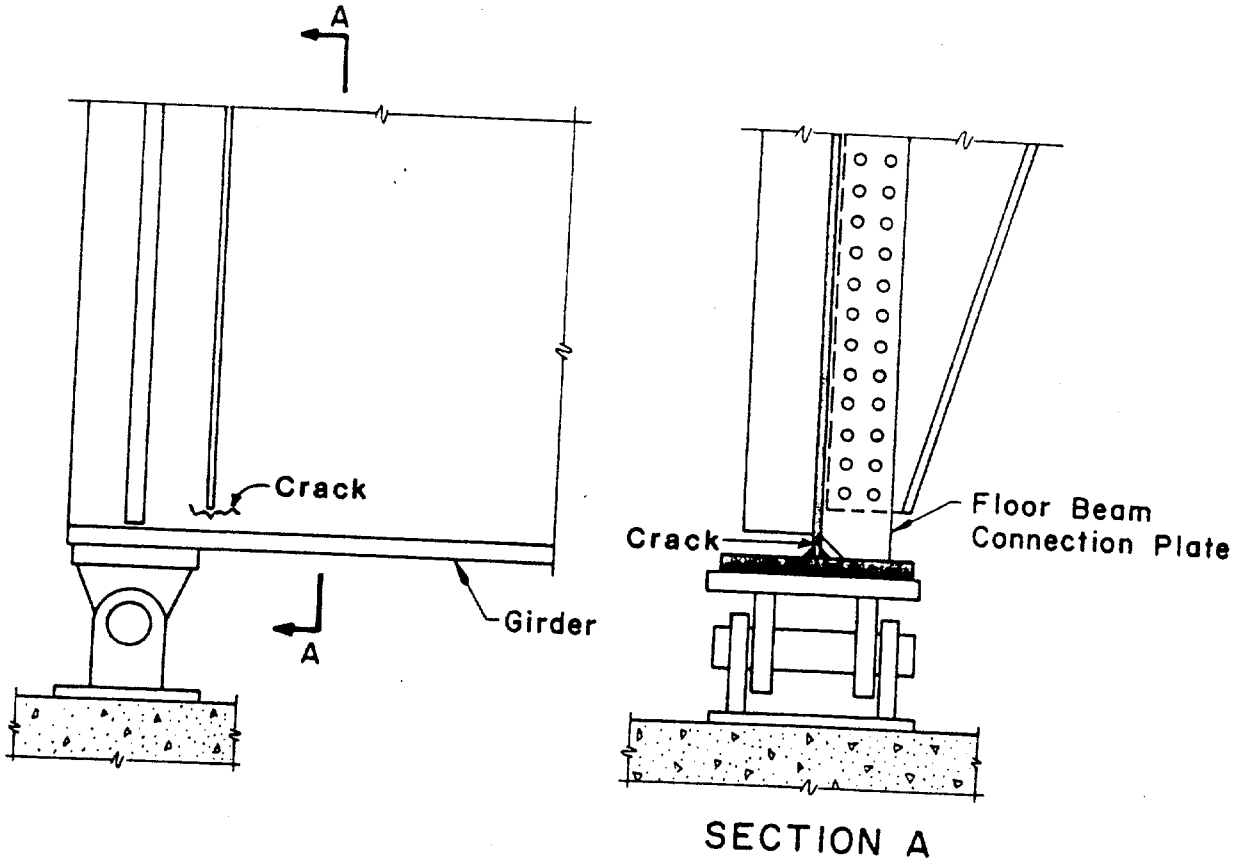

Schematic Showing Crack in Girder Web at
Floor Beam Connection Plates at Supports

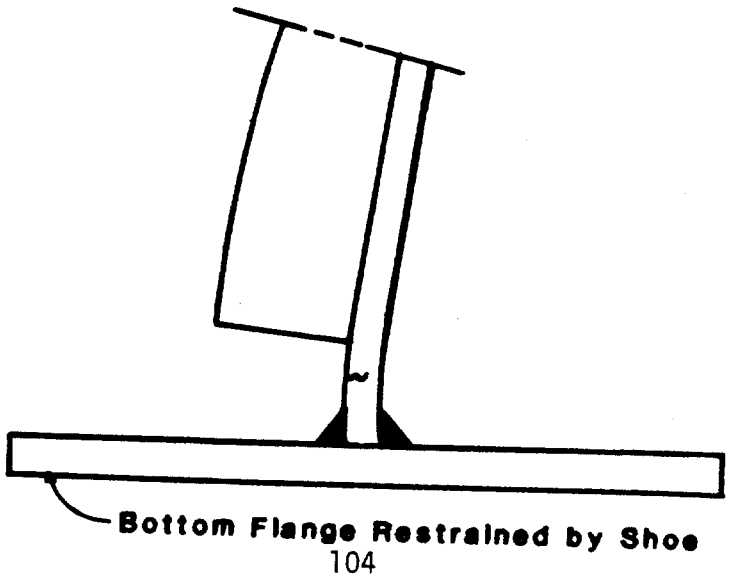

Source: Fisher, (23)

In a typical girder-floor beam framing system, the floorbeams will deflect with the passage of the live load causing the ends of the floor beams to rotate. This causes the girder webs adjacent to the ends of the floorbeam to distort out of the plane of the web and may result in the development of cracks.

The web adjacent to the floor beam connection plates at the end supports may develop fatigue cracks as illustrated in Figure 46 because the flange is restrained by the bearing. As the bottom of the connection plates tries to move laterally, the flange is restrained by the bearing device. This results in out-of-plane distortions in the web in the small gap below the connection plate.

Cracks can initiate at the bottom of the connection plate and propagate horizontally. These cracks will typically turn and run up the web diagonally. This is typical of secondary stress-induced cracks.

Gusset plates are also suspect areas for fatigue problems due to the racking action of the attached primary members. Improper coping (see Figure 55) of the plates to fit around stiffeners and flanges increases the likelihood of these problems. In a manner

similar to that previously described, the tension flange (top flange in the negative moment region) is restrained from rotation by the deck slab. The out-of-plane movements in the web may result in cracking at the weld toe at the top of the connection plate, or along the bottom of the longitudinal web/flange weld, as shown in Figure 47. Relative movement of the crack faces allow corrosion products to run down the girder web thus making these cracks visible. Up to 50% of all bridges with this detail have fatigue cracks. (23)

Diaphragm connection plates, particularly on skewed bridges, cause distortions in the web gaps due to differential deflections of the beams. As the bottom end of the diaphragm rotates, a crack may form at the lower end of the connection plate. Working of the crack face will liberate oxides which may stain the girder web. These stains are the telltale indication of the crack development.

f. Web Stiffeners. Another area in which bridge designers have attempted to economize in the use of material is in the girder webs. Traditionally, the practice has been to make the web as thin as possible and control buckling with stiffeners. Figure 48 illustrates various types of transverse stiffeners. The stiffener causes a discontinuity in the member and is therefore a potential fatigue crack site. Since the stiffeners are normally welded to the web, the weld is another possible site for a fatigue crack. Figure 49 illustrates a fatigue crack at the base of a welded

FIGURE 47
TOP OF CONNECTION PLATE

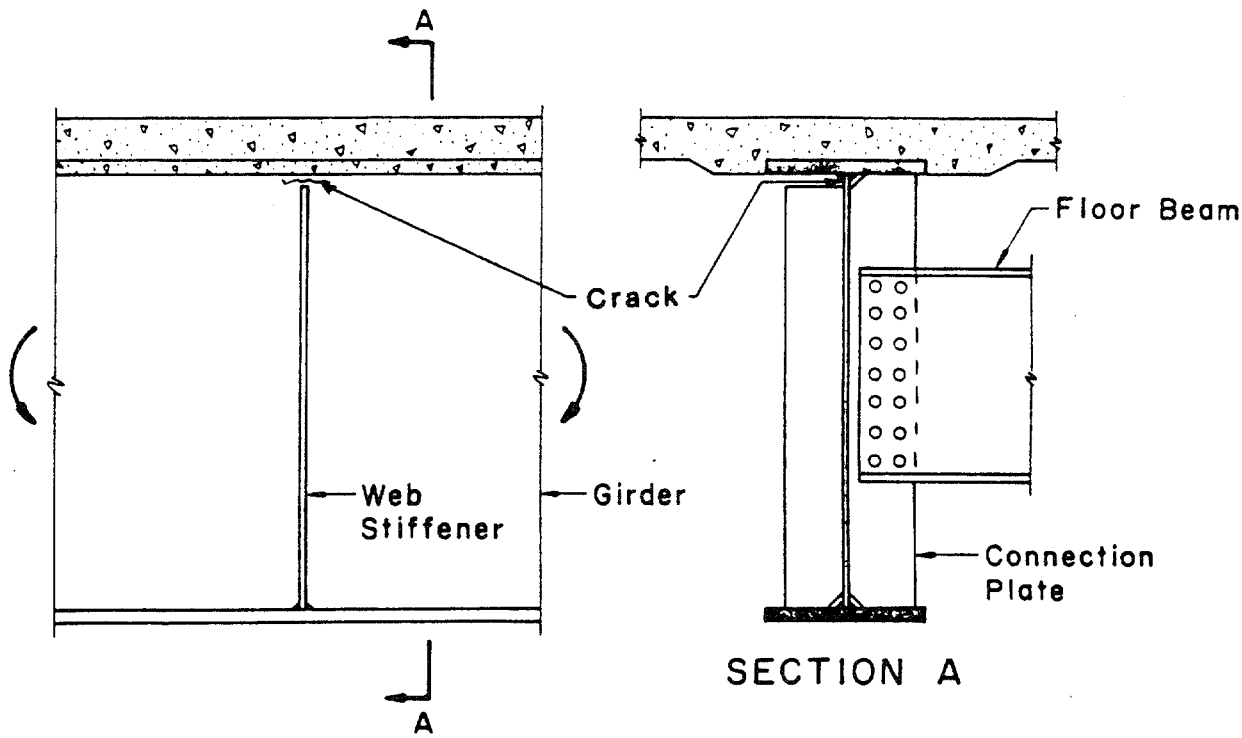

Schematic of Crack in Girder Web at Floor Beam Connection Plates

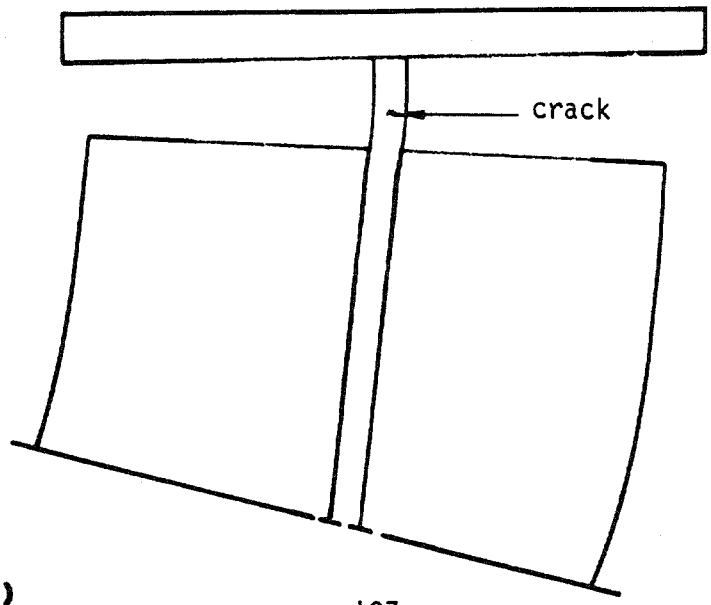

Source: Fisher, (23)

FIGURE 48
VERTICAL ATTACHMENTS

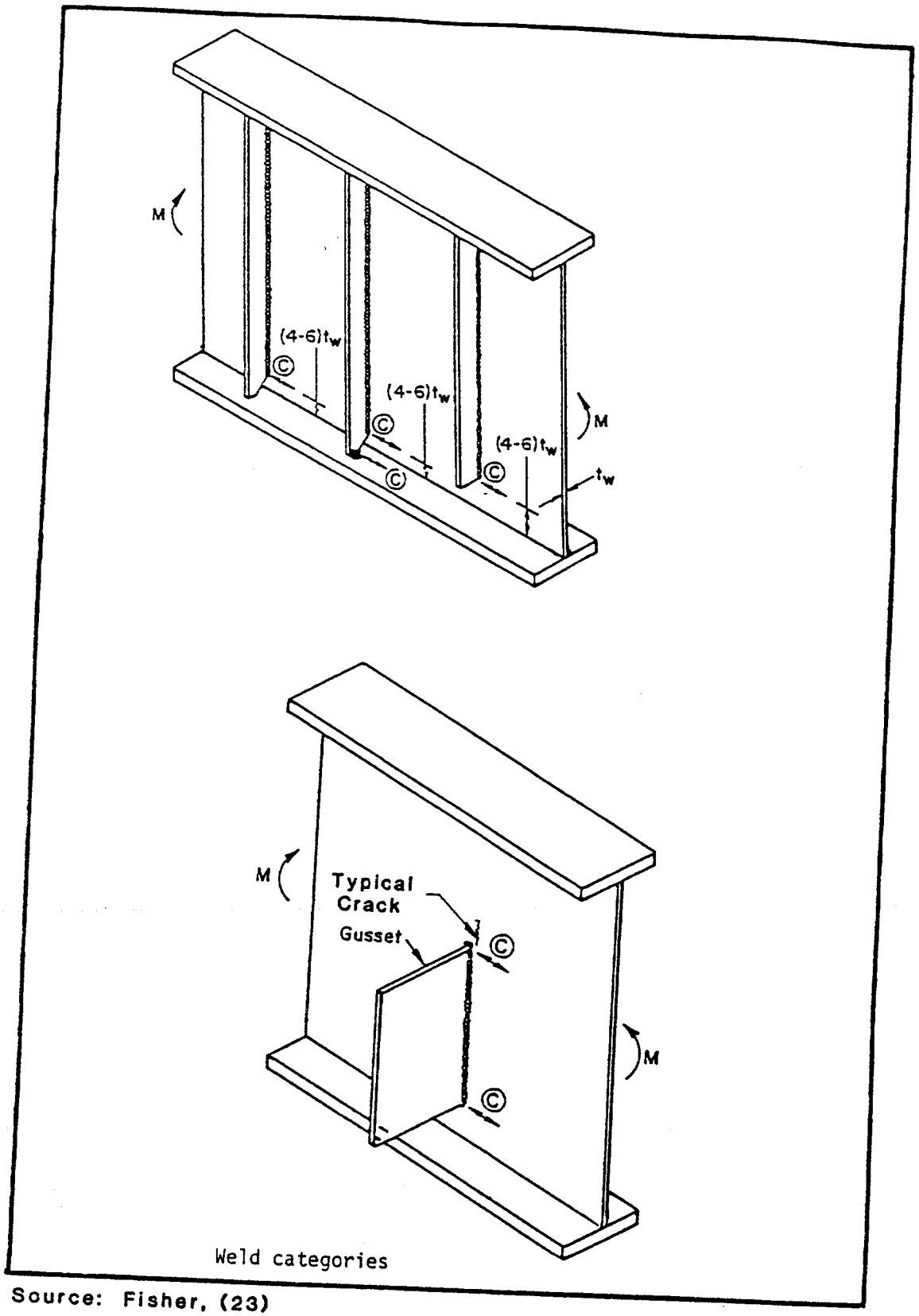

Source: Fisher, (23)

transverse stiffener. In the previous discussion on displacement induced stresses, the problem of web distortion is restricted to a small space. Web distortion occurs in the gap between the end of the stiffener and the flange of the girder. This distortion is more likely to produce fatigue cracks in high stress regions near the tension flange as shown in Figure 50. On a continuous bridge, where the tension flange over the pier is restrained by the deck, and cross braces are attached to the stiffener, the torsional force on the web may be considerable, making this a highly suspect area.

Damage may be done to the web during transit or erection of the member before support is provided by the framing. This may cause cracks to develop at any stiffener rather than only in regions of high tensile stress.

The connection of longitudinal stiffeners to the web are locations where the initiation of fatigue cracks in the webs can occur. This normally occurs either at the end of the stiffener as shown in Figure 51, at an improperly made butt weld in the stiffener plate as shown in Figure 52, or at a flaw in the longitudinal fillet weld. Any narrow gap between the longitudinal stiffener end and transverse stiffener is likely to have high stress concentration. The intersection of horizontal and vertical welds attaching stiffeners and gusset plates to webs is also a fatigue prone

FIGURE 49
CRACK AT VERTICAL STIFFENER

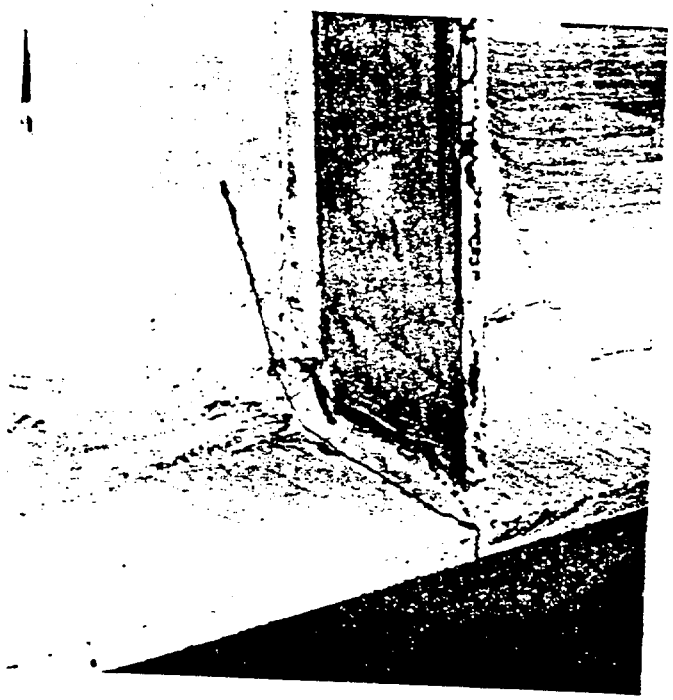

Crack in tension area of web and flange

Source: Fisher, (27)

FIGURE 50
CRACK AT VERTICAL STIFFENER

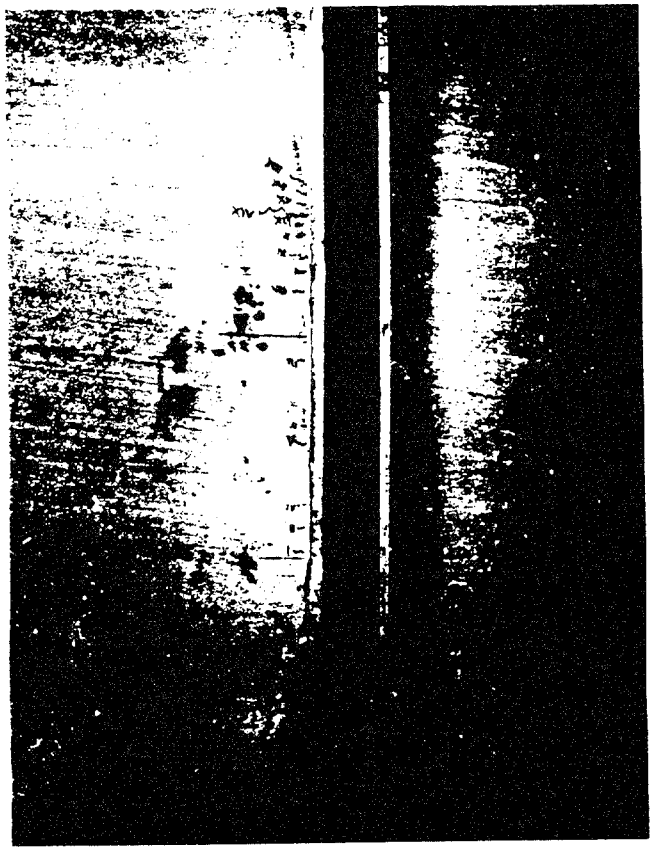

Cracks in Areas of

Web Tension Adjacent

to Stiffeners

Source: Fisher, (27)

FIGURE 51
LONGITUDINAL STIFFENERS

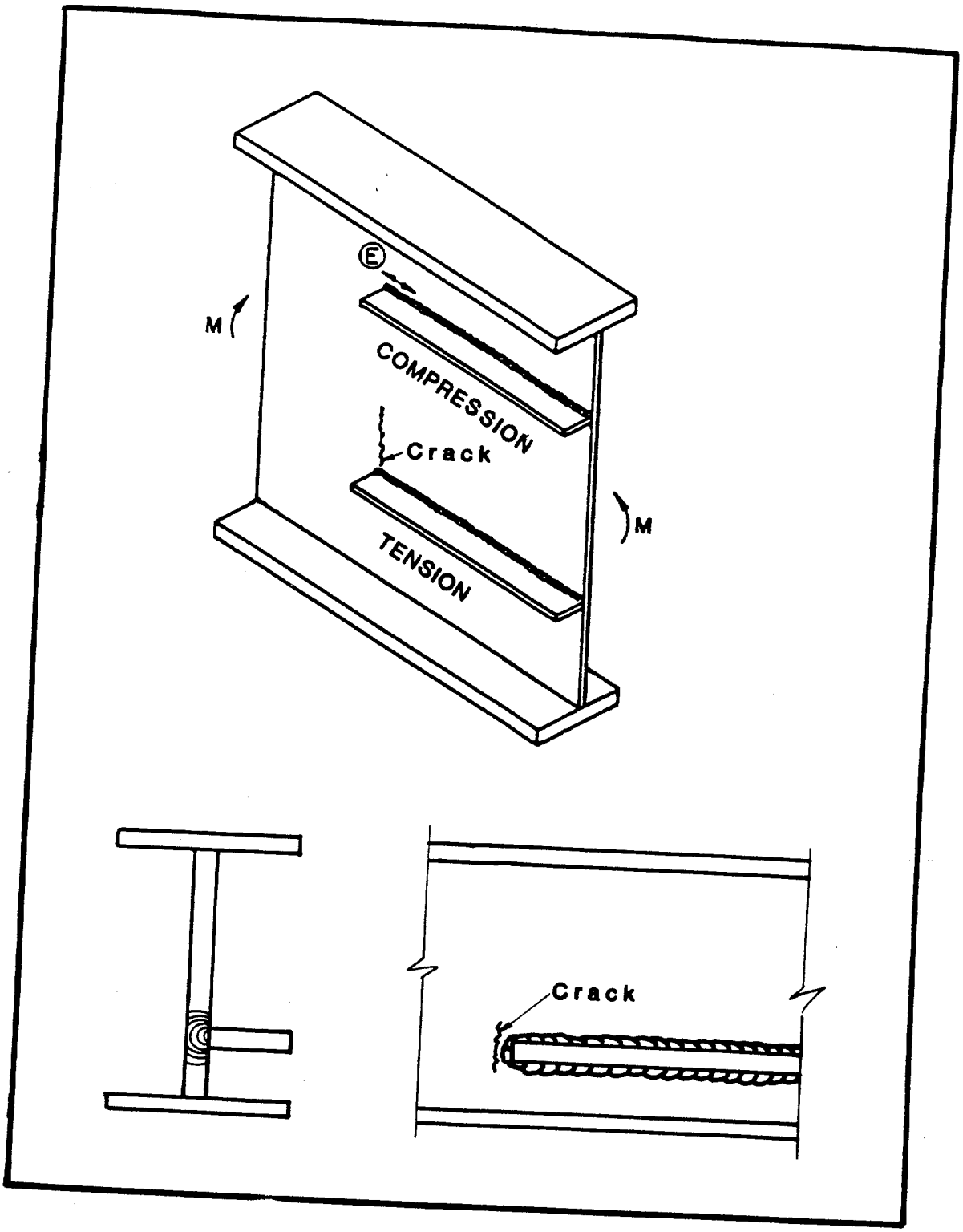

Source: Fisher, (23)

location as illustrated in Figure 53. Web stiffeners are obvious secondary parts of plate girders and consequently the quality control for the welds may not have been given proper attention in original fabrication. If this is the case, the resultant defects provide sites for crack initiation.

When longitudinal stiffeners are fabricated from pieces which must be butt-welded together, and the weld as shown in Figure 53 does not achieve full penetration, the incomplete penetration can act like a built-in crack. This discontinuity can result in the propagation of a crack through the width of the stiffener and then vertically into the web as illustrated in Figure 52.

Horizontal connection plates used to connect lateral bracing as shown in Figure 55 are category E connections. Figure 54, detail a, shows this connection made to the bottom flange and Figure 54, detail b, shows a similar connection directly to the web.

Cracks associated with these plates begin at the toe of the weld at the ends of the plate and grow into the flange or web. These cracks propagate through the thickness of the web and vertically across the web and/or horizontally across the flange. Cracks can also begin along the length of the weld at any point. The center portions of the welds however fall in a higher stress category (B) and are seldom critical.

FIGURE 52
LONGITUDINAL STIFFENERS WITH BUTT WELDS

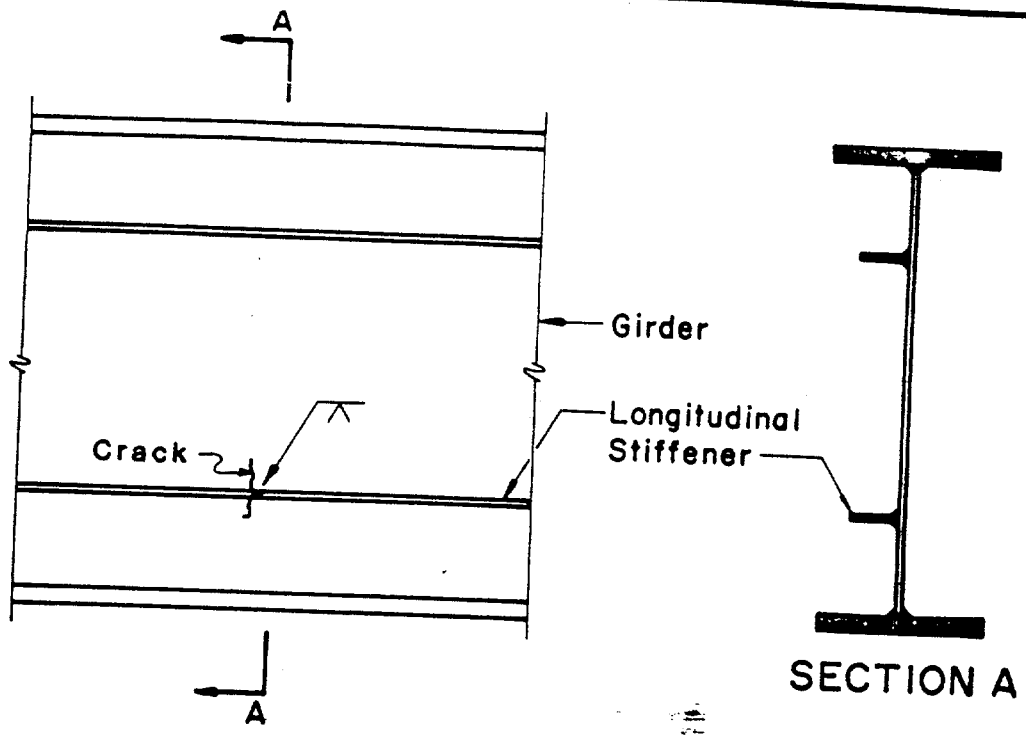

Schematic of Girder Showing Longitudinal Stiffeners in Tension Stress Region with Butt Welded Splice

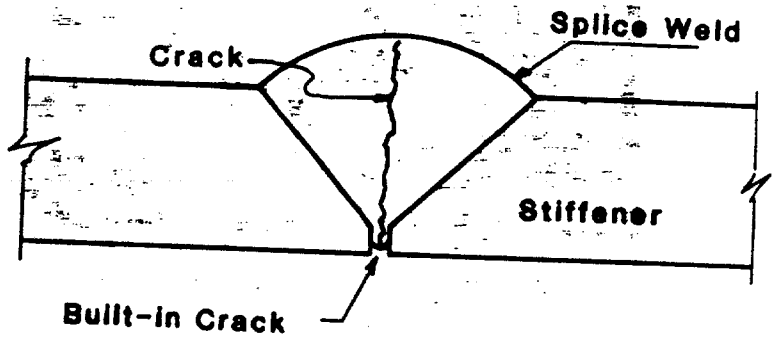

Source: Fisher, (23)

FIGURE 53
INTERSECTING WELDS

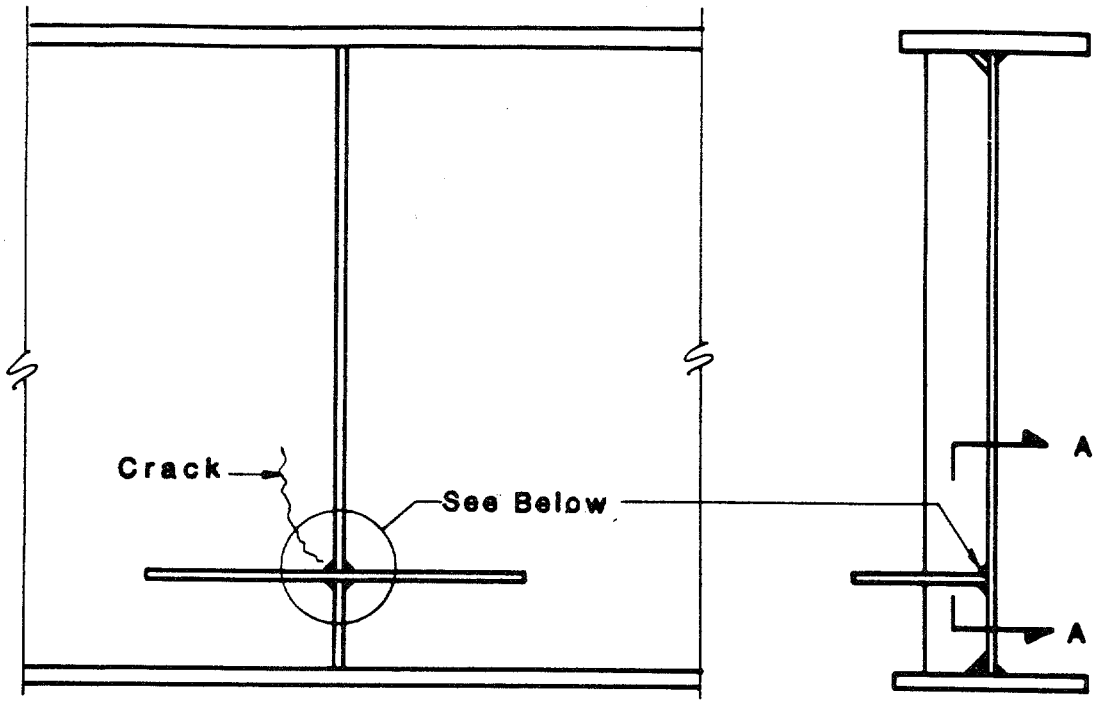

Schematic of Intersecting Welds at
Gusset-Transverse Stiffener-Web Intersection

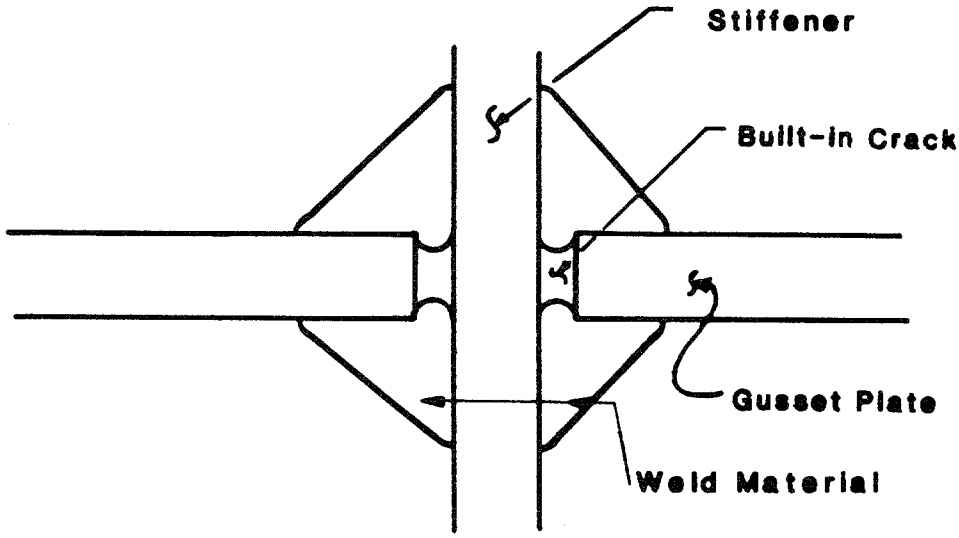

SECTION A-A

Source: Fisher, (23)

FIGURE 54
FLANGE AND WEB ATTACHMENTS

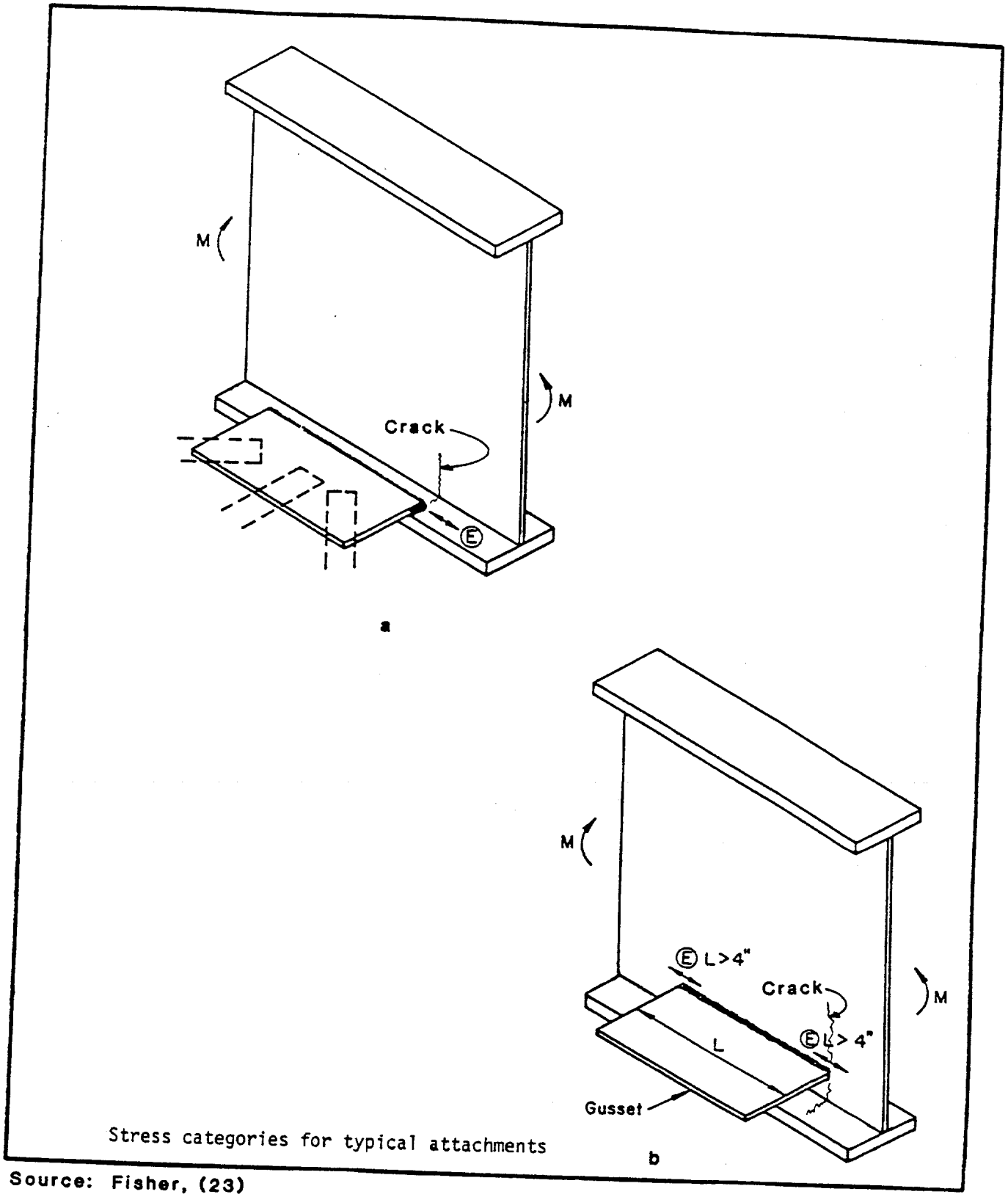

Stress categories for typical attachments

Source: Fisher, (23)

Short horizontal attachments with a length along the member of less than two inches are usually limited to utility attachments, inspection hand rail connections and other similar details. Cracks may initiate at the toe of the weld at the end of the horizontal attachment. Cracks may then propagate vertically along the weld. These attachments may be classified in any category from B to E depending on the exact details.

g. Coped Sections/Re-entrant Corners. On some bridges, portions of steel sections are removed to facilitate framing or passage of a member as in Figure 55. Since most copes are cut from two perpendicular directions, a crack may be found in the coped member due to overcutting. If the cope was flame cut, residual stresses may compound the problem. When flanges are coped, the bending resistance is reduced very substantially. As the girder end rotates, the cracks alternately open and close resulting in fatigue crack propagation. These details provide a number of stress points that often result in crack initiation.

The connection between two beams is the most common use of a coped section. This may be the connection of a floor beam to the girder or a stringer to the floorbeam. Normally both members support the deck. The smaller member is coped to fit around the flange of the larger member to permit the connection. The cracks initiate at sharp reentrant corners or at irregularities in the coped web.

FIGURE 55

COPES

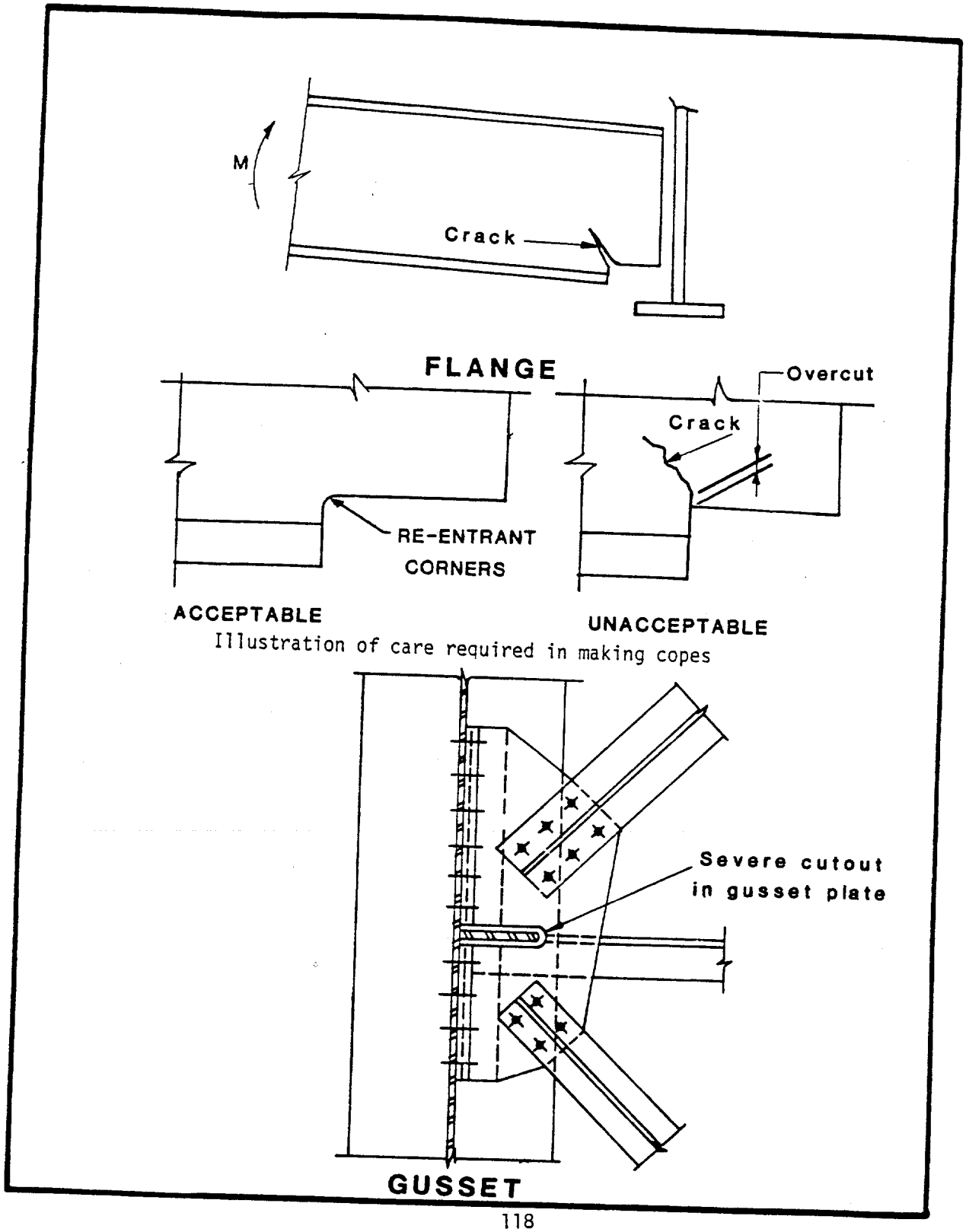

Differential deflection of the framed member with the main girder often increases the tensile stress on the coped section. This places additional stress on the connection. If a coped section was made by flame cutting, residual tensile stress exists along the edge that can crack under repeated compression rather than tensile force. Shear forces contribute to the crack propagation. Beam-to-girder or beam-to-cross-girder connections, as illustrated in Figures 56 and 57, are category E or E' connections. When the cross girder web is cut so that the longitudinal beam is continuous, very high stresses may result at the flange tips if the flange is welded to the girder web as shown in Figure 56. Cracks initiate at the toe of the weld at the ends of the flanges passing through the web, and may begin to propagate after a short time in service.

When box beams frame into columns as shown in Figure 58, two potential types of fatigue problems can arise: category E details and lamellar tearing. Since the flange of either the beam or the column is welded perpendicular to the other, highly restrained joints result which may initiate lamellar tearing. Figure 59, detail b, illustrates this phenomena. Since the top flange at the supports is in tension, high stress concentrations can result at the edges of the tension flange. Figure 59, detail a, illustrates the most likely type of crack development at this connection.

FIGURE 56
FLANGE WHICH PASSES THROUGH WEB

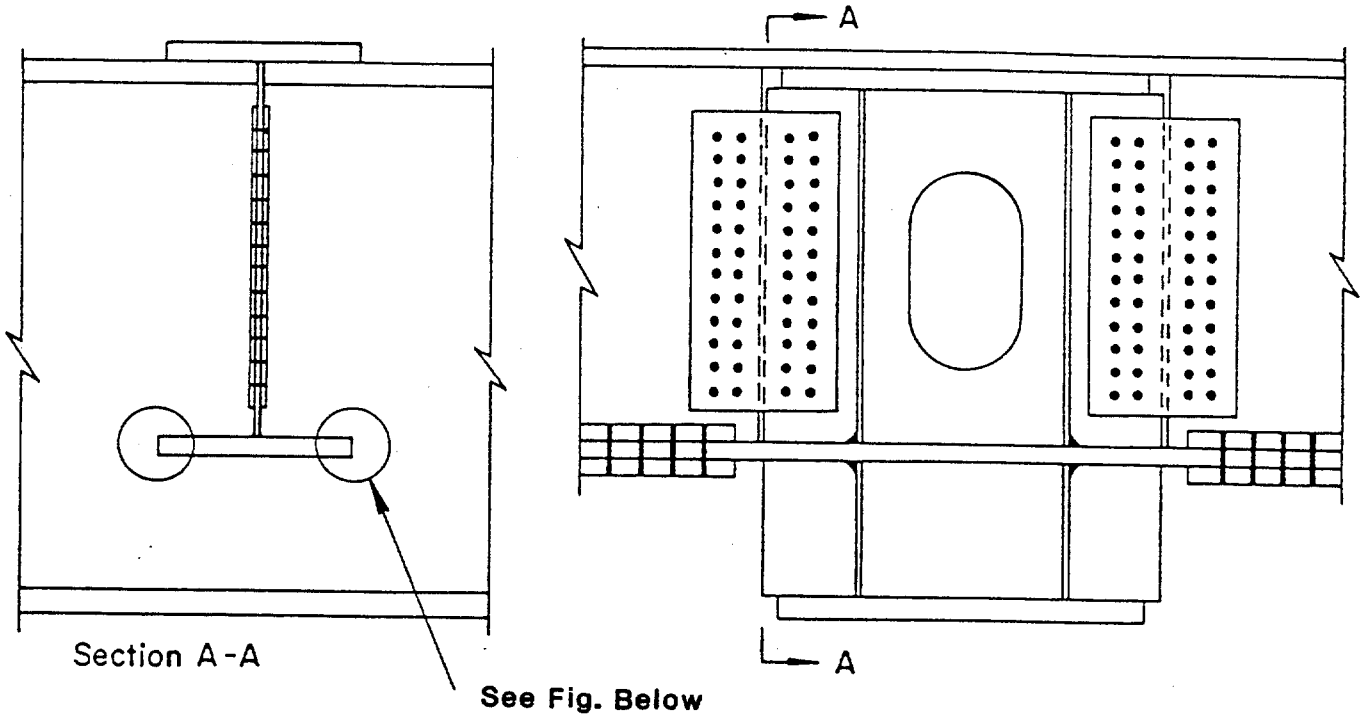

Schematic of Girder Flanges Passing through Box Girder Pier Cap

Blast Cleaned Joint Showing Fine Hairline Crack

Source: Fisher, (23)

FIGURE 57

BEAM TO GIRDER CONNECTIONS

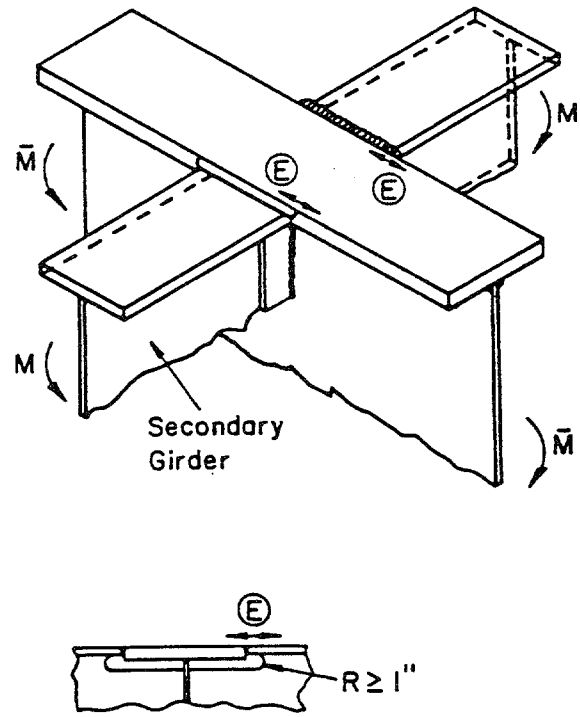

Stress categories for this important connection

Source: Fisher, (23)

FIGURE 58

BOX BEAM TO COLUMN CONNECTION

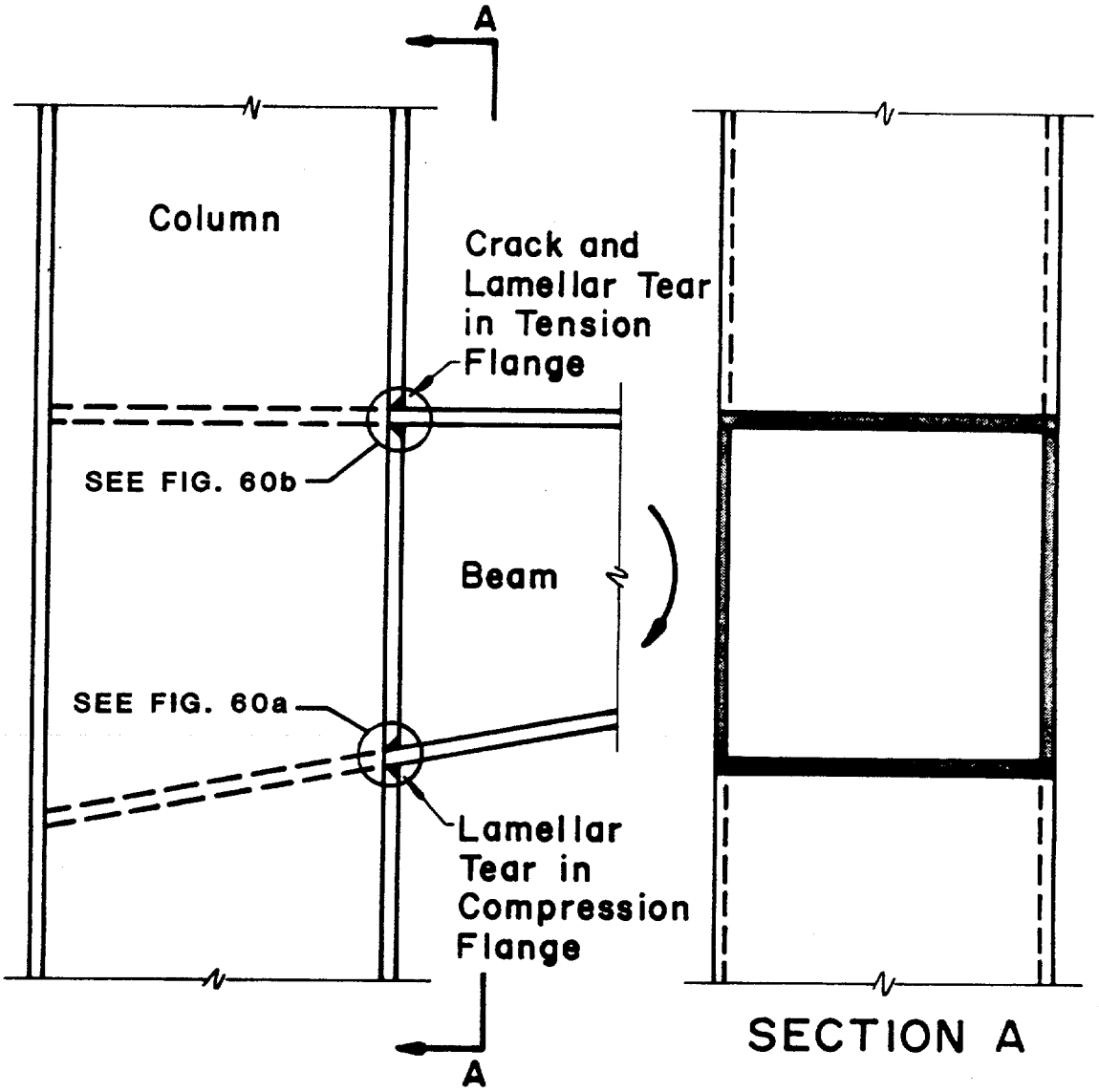

Source: Fisher, (23)

FIGURE 59

BOX BEAM TO COLUMN DETAILS

Cracking at Top Tension Flange Weld Toe
Connecting to Midthickness Lamellar Tear

a

Lamellar Tear in the Compression Flange Midthickness

b

Source: Fisher, (23)

h. Eyebars. A substantial number of pin connected truss bridges with eyebars as the tension members are still in service. These bridges are generally from 50 to 75 years old. Compared with today's steel, the steel in them is relatively impure with high carbon, poor weldability and brittle characteristics. Increases in traffic volume and vehicle size have made most of the bridges functionally obsolete, and some have been dismantled and re-erected on less traveled routes.

Each eyebar member may be composed of one, two, or more individual eyebars. The fewer eyebars present in a member, the higher the inspection priority should be. When the older eyebars were originally shaped, the process involved heat treatment and forge welding. On the lighter trusses this was done with a single bar of steel that was heated and bent around a pin of proper size. The end was then forged back with the bar to form a closed loop by pounding it into the required shape with a hammer.

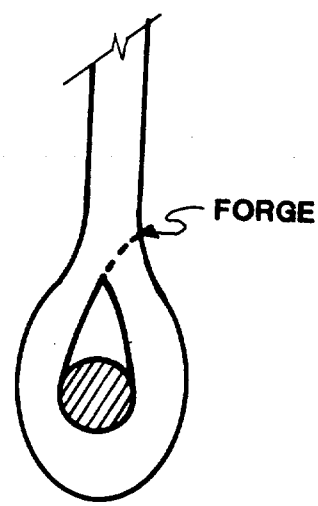

On the larger trusses the ends of the eyebar that connect to the pin were cast in a mold to form the correct shape. The two portions were joined as shown below.

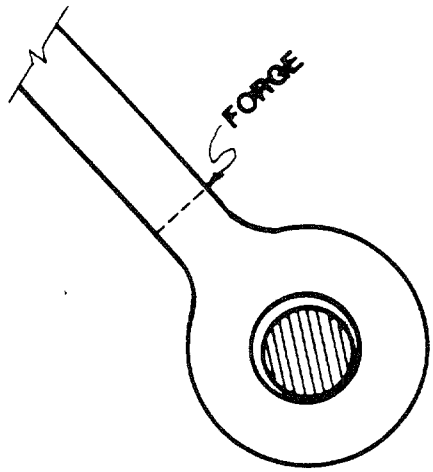

Many eyebars have fractured at the interface where the steel sections were heat forged together. Crack detection devices will reveal delaminations at this interface on virtually all the eyebars shaped in this manner. Visible evidence of separation is justification for concern.

i. Special Situations.

(1) Shear Connectors. Shear connectors are added to beams or girders to provide composite action between the concrete slab and the steel girder. Ordinarily, these shear connectors exist only in regions of compression in regard to the top flange of the beam. However, in certain instances on continuous beams and girders the shear connectors are present through the negative moment regions

over the piers. When this is the case, tension cracks may develop in the top girder flange. Figure 60 shows what these cracks might look like on the underside of the top flange in the area near a continuous support.

(2) Pin and Hanger Assemblies. Hanger plates of a pin and hanger assembly as shown in Figure 61 are usually not prone to the development of fatigue cracks. Problems can develop, however, if the pin becomes frozen. In this case, the hanger plate will undergo a stress range which was not anticipated in the design as illustrated in Figure 62, and a decreased fatigue life may result. Pin and hanger assemblies are not ordinarily sensitive to fatigue from a unit stress standpoint, but their alignment, skew aspects, and retainer mechanisms are vitally important, since they may cause the hanger plates to "walk" off the pin and cause catastrophic collapse. The complex details can also allow rust buildup which is not easily detected.

(3) Punched Holes. Fatigue crack development in riveted structures is rare. Internal redundancy, the use of members built up from several plates and shapes, allows a plate to fracture without forcing the crack to propagate beyond that plate. In addition, "Play" in riveted connections can tolerate out-of-plane distortions.

FIGURE 60

CRACKS NEAR SHEAR STUDS

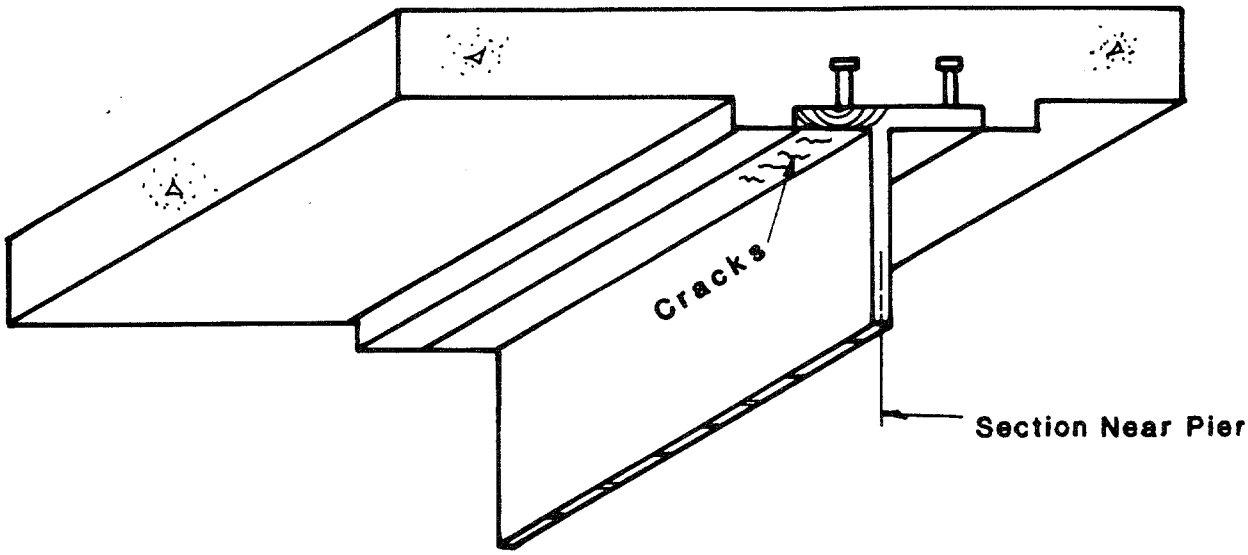

Cracks in region of negative moment

FIGURE 61
PIN AND HANGER ASSEMBLY

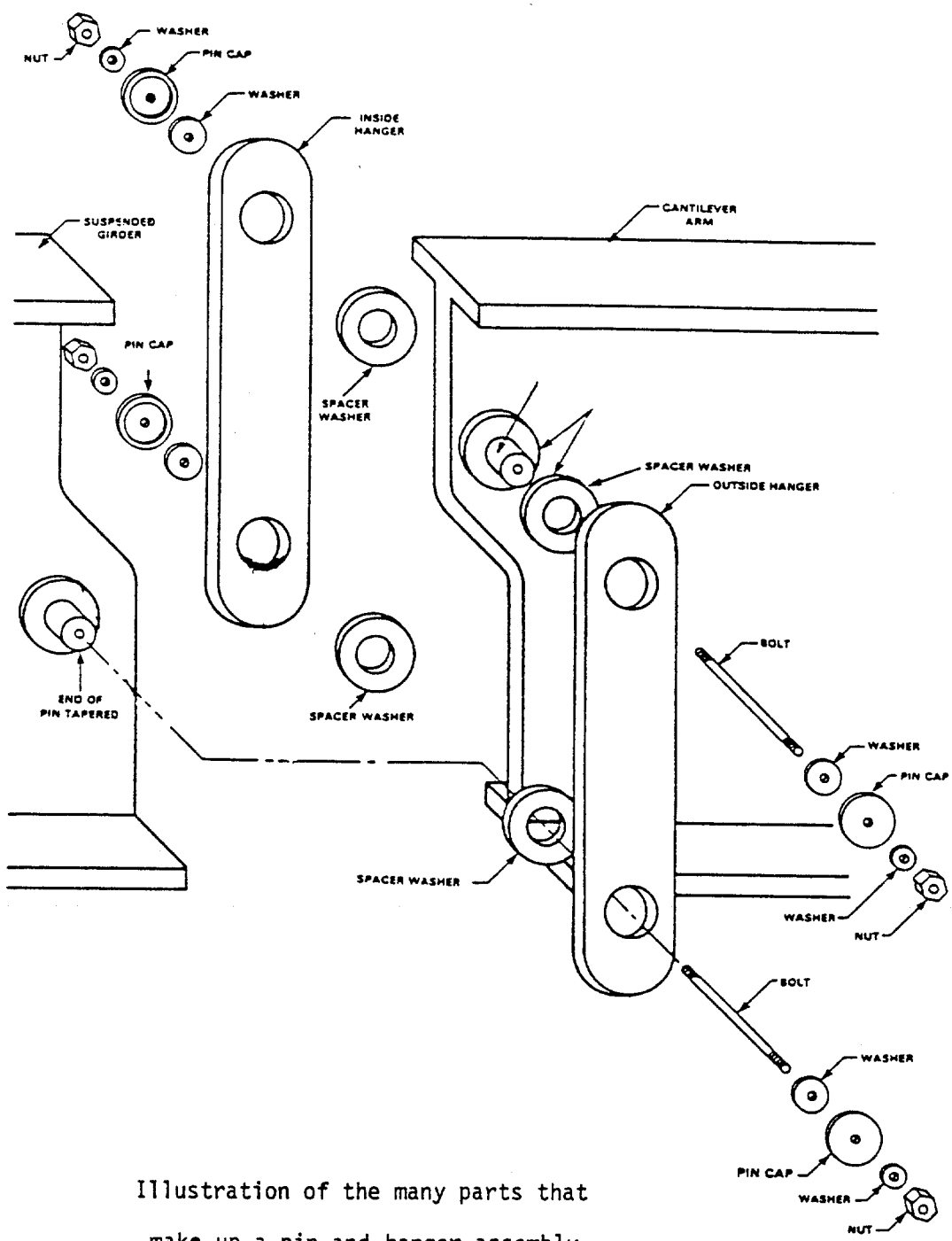

Illustration of the many parts that make up a pin and hanger assembly

Source: NTSB, (55)

FIGURE 62

STRESS REVERSALS IN HANGERS

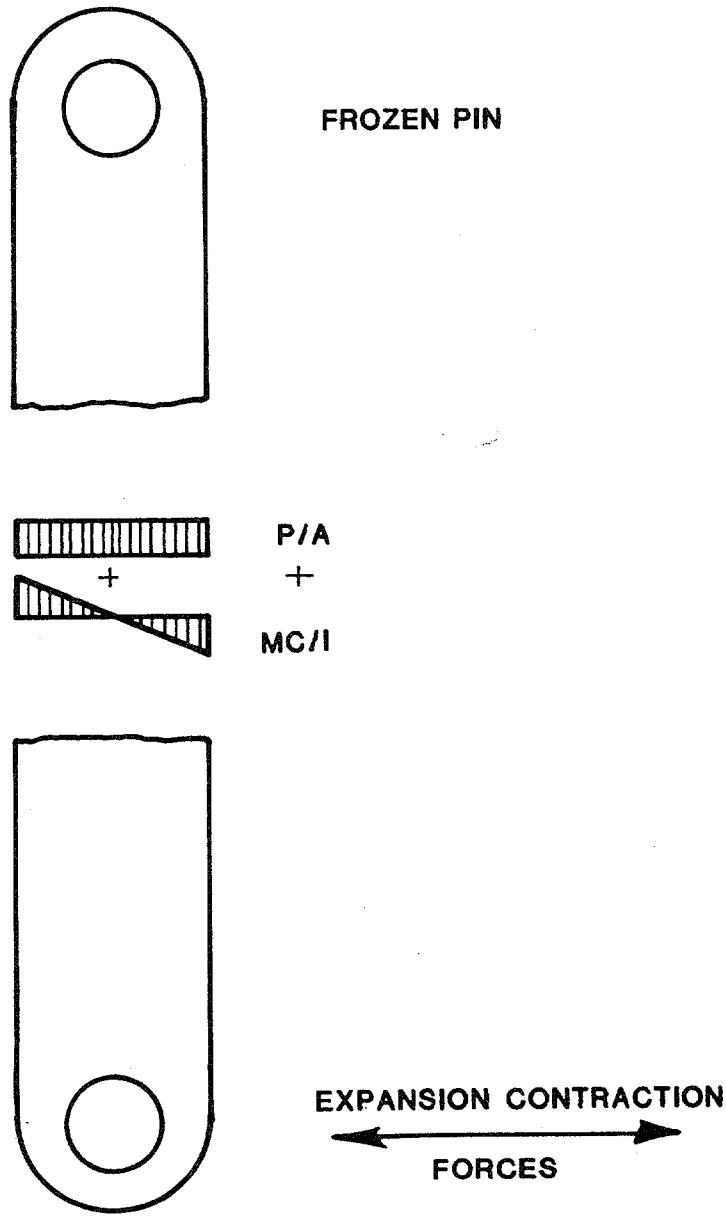

A corroded or frozen pin at either end of a hanger will subject the hanger to increased stress reversals

Holes for bolts and rivets can either be drilled or punched. Those that are punched may have notched edges which may lead to fatigue crack initiation as shown in Figure 63. This type of crack is difficult to detect since the crack is not visible until it has propagated beyond the rivet or bolt head. It may be possible to tell from the plans, if available, how the holes are formed. Subpunching and reaming, or drilling, produce holes superior to punched holes.

(4) Prying on Rivet and Bolt Heads. Prying on rivet and bolt heads is caused by the end rotation of the floor beams, stringers, or other structural members applying tension cycles to the rivet or bolt shaft. Figure 64 illustrates this problem. Corrosion around the rivet head, and later, gapping under the rivet head, are typical external signs.

(5) Tack Welds. Tack welds are used in construction to temporarily hold pieces together until bolts, rivets or permanent welds are in place. Tack welds produce small restrained regions of the member similar to intermittent welds which, when made using improper welding conditions and poor quality control, can result in the development of cracks as illustrated in Figures 65 and 66. Although most engineers consider riveted structures to have superior fatigue life, the use of tack welds prior to riveting was a very common practice and may reduce the fatigue life of a riveted members.

FIGURE 63
CRACKS AT RIVET HOLES

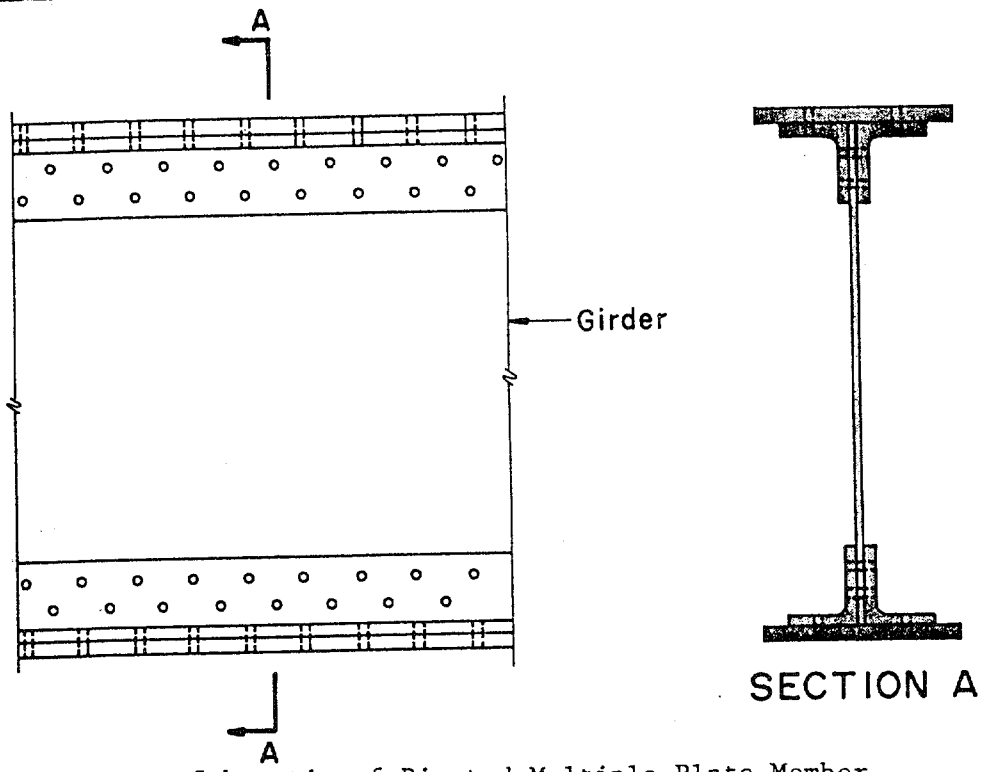

Schematic of Riveted Multiple Plate Member

Obvious Cracking at a Rivet Hole

Source: Fisher, (23)

FIGURE 64
PRYING ON RIVET HEADS

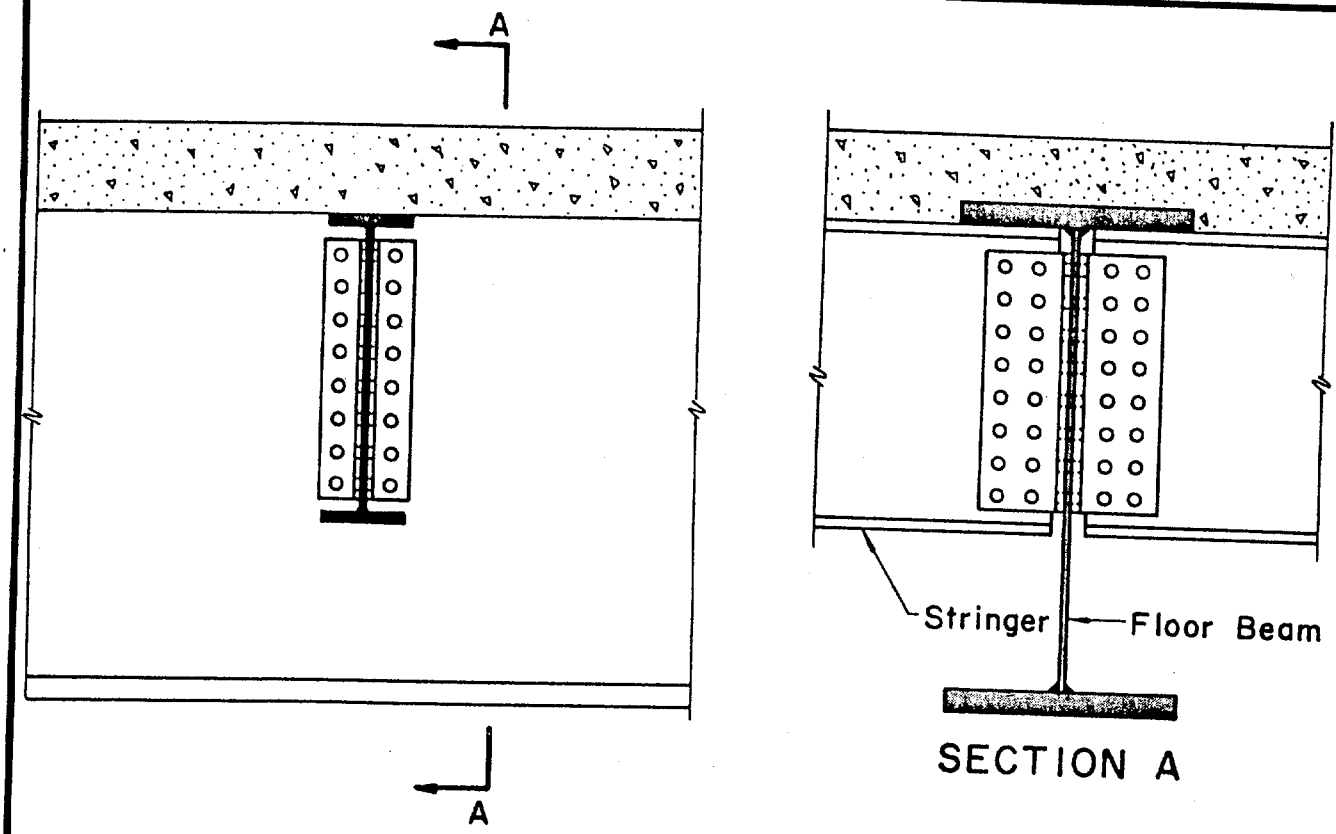

Schematic of Stringer-Floor Beam Connection

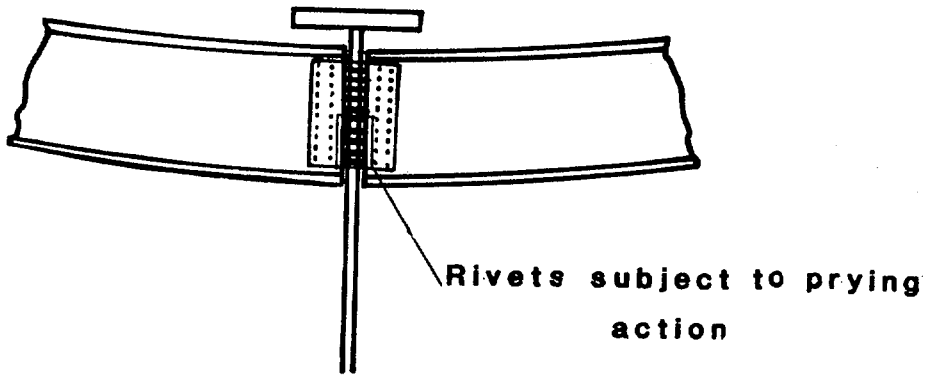

Prying on lower Rivets in Connection

Source: Fisher, (23)

FIGURE 65

TACK WELDS IN CANTILEVER SPLICE PLATES

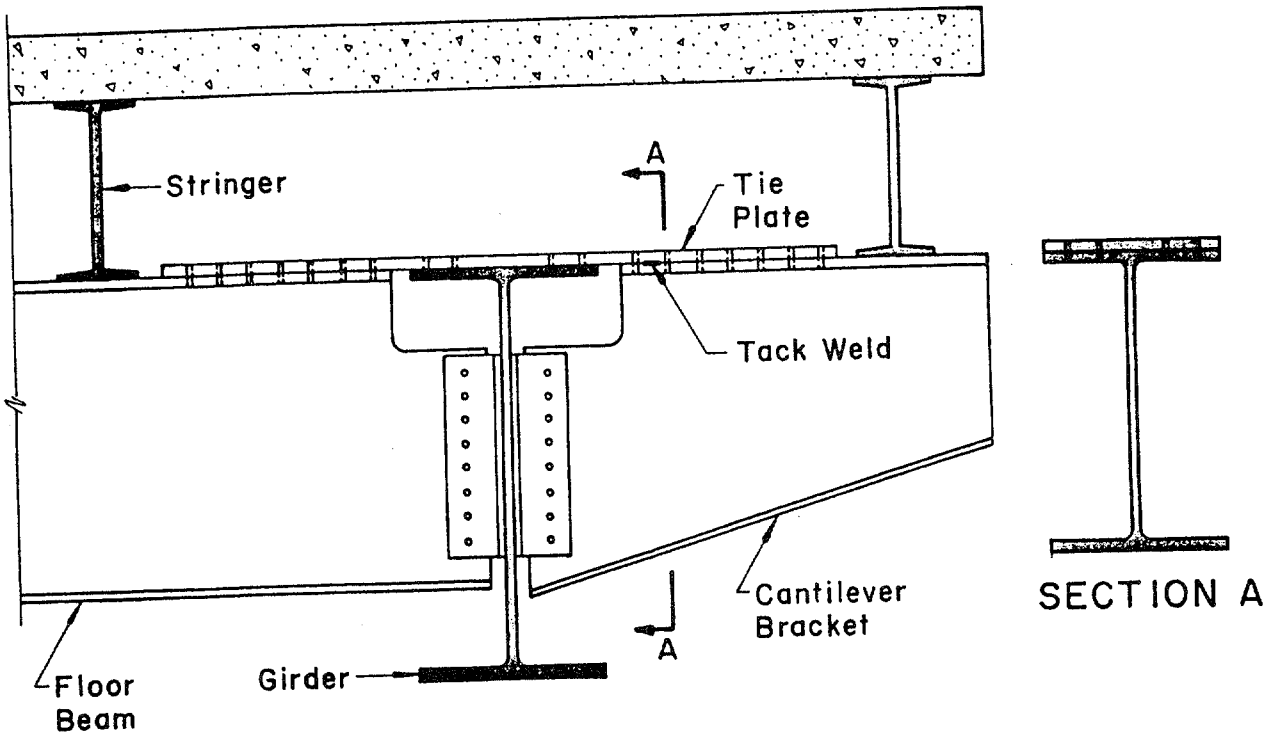

Schematic of Longitudinal Girder, Floor Beam and Outrigger Bracket Connection Showing Tack Weld Location on Tie Plate

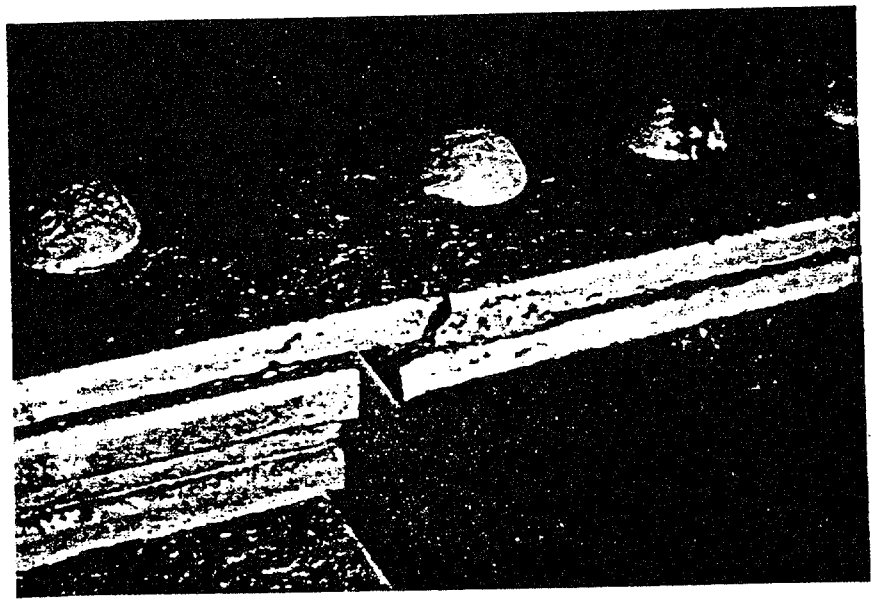

Crack in Tie Plate at End of Tack Weld

Source: Fisher, (23)

FIGURE 66

TACK WELDS IN BUILT UP TRUSS MEMBERS

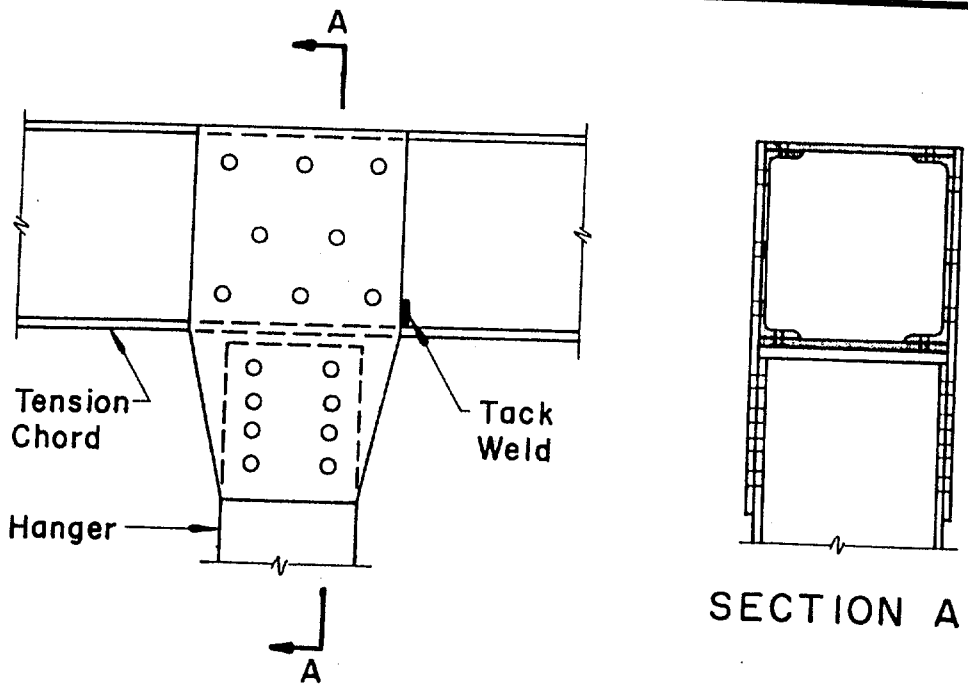

Schematic of Hanger-Chord Connection Showing Location of Tack Weld and Crack in Chord

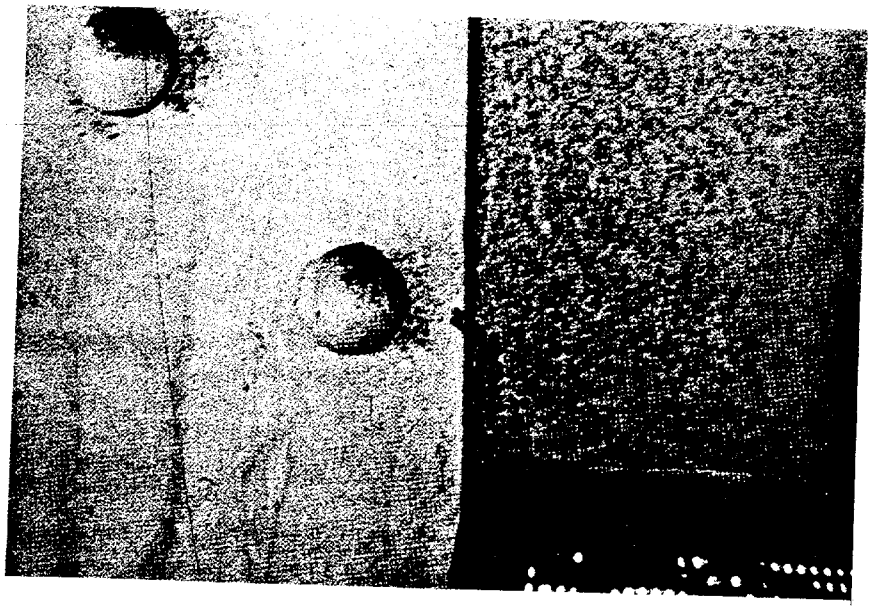

Small Fatigue Crack in Channel Section at Tack Weld Attaching Gusset Plate to Chord Member

Source: Fisher, (23)

4-3.4 What To Look For.

When inspecting FCMs the attitude should always be to err on the side of conservatism. Although the visual inspection may be imperfect in identifying a crack in a steel bridge, it is the only practical method presently available with which to determine suspect areas requiring further investigation. The potential consequences of dismissing a questionable blemish on a FCM are too great to take chances. Anything that suggests the early stages of a fracture is justification for further investigation and/or remedial action. At this point it is desirable to emphasize the importance of documentation, both written and photographic, for all areas of a suspicious nature prior to their disturbance with cleaning and other preparation.

a. Appropriate surface conditions. The statement was made previously that a bridge that receives proper maintenance requires less time to inspect. This is especially true in crack detection. Thorough cleaning and proper paint application result in a smooth surface. FCMs warrant this level of maintenance. If the member is corroded or covered with droppings or debris, or if the surface of the paint is irregular due to flaking or alligatoring it becomes more difficult to ascertain the presence of a flaw. The inspector should identify FCMs that cannot be properly inspected due to the surface condition with appropriate recommendations for treatment such as blast cleaning.

b. Initial crack identification. This manual provides considerable information regarding the situations that cause cracking in steel members and the locations where the cracks are likely to initiate. The inspector should apply this information in the evaluation of a FCM. Any time that the surface of the member indicates signs of potential cracks the member should be thoroughly inspected. The first visible evidence is normally a crack in the paint film. Depending on the location and the length of time the paint has been open, there may be a thin line of rust stain emanating from the crack as shown in Figure 67. Removal of the paint around the crack and careful examination with a 10-power magnifying glass will help to determine if the crack extends below the paint film.

Crack identification on unpainted A588 steel is particularly difficult. There is no staining due to oxidation and the rough surface texture tends to hide the crack.

c. Evaluating the crack. The actual crack in the member may extend beyond the visible limits. A suitable nondestructive test such as the dye penetrant test can help establish the limits of the crack. This test may be performed by the inspector after the surface is clean and the paint removed. Detailed instructions for use of the dye penetrant test are provided by the manufacturer and general use is described in section 5 of this chapter. Other more sophisticated

FIGURE 67

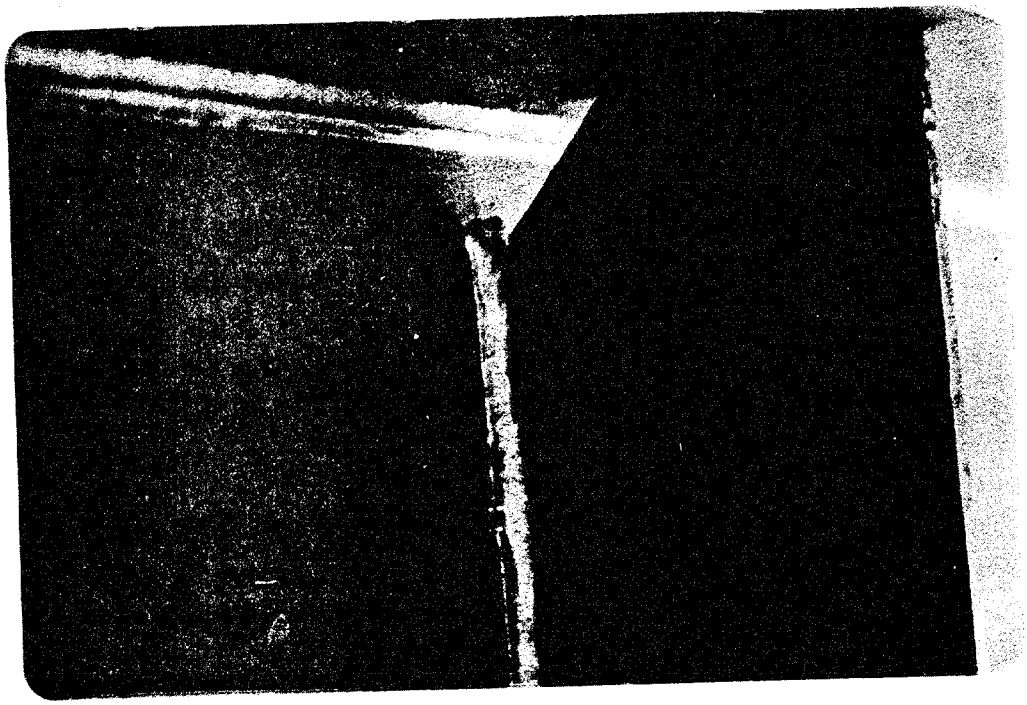

Oxide stains on paint

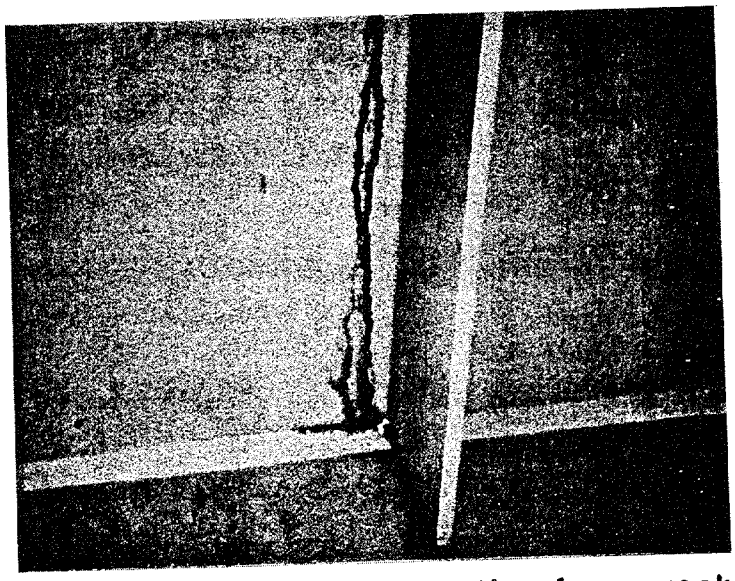

Oxide stains on paint eminating from crack

crack detection devices are also described in section 5. Normally, the inspector would not use these devices; but would recommend appropriate testing by others to determine if additional invisible cracking is present when a visible crack is located. In evaluating the crack it is important to determine the location, the direction or orientation, the length, and depth if possible.

d. After the crack is found. Most bridges are symmetrical from side-to-side and end-to-end. There are usually other locations that are identical or similar to the location of the crack. Since the other parts have been exposed to the same conditions, they should be highly suspect about having or soon developing similar cracks. The inspector should inspect these areas closely and may recommend nondestructive testing.

Section 4. INSPECTION PROCEDURES

4-4.1 Two-Girder Systems.

The fracture critical members in a two-girder system are the main longitudinal girders into which the floorbeams frame. They are normally built-up members and in older bridges would be riveted, while in newer bridges, bolted and/or welded plate girders predominate. The load is transferred to the longitudinal girders by floorbeams which are connected by

plates welded to the web or by angles which are normally found in riveted connections. Proper inspection procedures should include the following steps:

a. Welded Members. (Both sides of each girder in tension areas must be included.)

(1) Check all transverse groove welds for indication of cracks, especially near backup bars.

(2) Check all transverse stiffeners and connection plates at the connection to the web, particularly at floorbeams and lateral bracing where out-of-plane bending is introduced.

(3) If longitudinal stiffeners have been used, check any butt weld splices in the longitudinal stiffeners. The web at the termination of longitudinal stiffeners should also be checked carefully.

(4) If cover plates are present, check carefully at the terminus of each.

(5) Observe any area of heavy corrosion for pitting section loss or crack formation

(6) If girders have been haunched by use of insert plates, observe the transverse groove welding between the web and insert plate.

(7) Check longitudinal fillet welds for possible poor quality or irregularities that may cause cracking to initiate. This is especially important during the first inspection of the member so that defects can be recorded and properly documented on follow-up inspections.

(8) Check for cracks at any intersecting fillet welds. If triaxial intersecting welds are found on a FCM they should be reported and carefully examined in future inspections.

(9) Check any plug welds.

(10) Check bolted splices for any sign of cracks in girders or splice plates and look for missing or cracked bolts.

(11) Check the entire length of the tension flanges and web for cracking which may have originated from corrosion, pitting or section loss, or defects in fabrication (e.g., nicks and gouges in the steel).

(12) Check entire length for temporary erection welds, tack welds, or welded connections not shown on the design drawings.

b. Riveted or Bolted Members.

(1) Check all rivets and bolts to determine that they are tight and that the individual components are operating as one. Check for cracked or missing bolts, rivets, and rivet heads.

(2) Check the member for misplaced holes or repaired holes that have been filled with weld metal. These are possible sources of fatigue cracking.

(3) Check the area around the floor beam and lateral bracing connections for cracking in the web due to out-of-plane bending.

(4) Check the entire length of the tension flanges and web for cracking which may have originated from corrosion, pitting or

section loss, or defects in fabrication (e.g., nicks and gouges in the steel).

(5) Check entire length for temprorary erection welds, tack welds, or welded connections not shown on the design drawings.

4-4.2 Pin and Hanger Connection.

Pin and hanger connections like those shown in Figures 68 and 69 (also called pin and link), when used in suspended span configurations in non-redundant two-girder or truss systems are fracture critical. They also occur in cantilevered span arrangements on continuous span structures. This type of connection warrants particular attention.

Due to the rotation of the pins and hangers under live load and thermal expansion, they tend to incur wear over a period of time. Since the pin is covered by the hanger plate, it is not normally painted by maintenance crews and will, with time, begin corroding. This type connection may be either exposed to the elements and spray of passing traffic, as in the truss of Figure 70, or directly underneath an expansion dam where water and brine solutions may collect between the bearing parts and between the hanger plates and webs of adjacent members as shown in Figure 71. This moist, corrosion-causing solution will dry out slowly, only to be reactivated during the next wet cycle.

a. Hanger Plates. The hanger plate as shown in Figure 69 is as critical as the pin in a pin and hanger connection. It is, however, easier to inspect since it is exposed and readily accessible; and the following steps are required:

(1) Try to determine whether the hanger-pin connection is frozen, as this can induce large moments in the hanger plates.

FIGURE 68

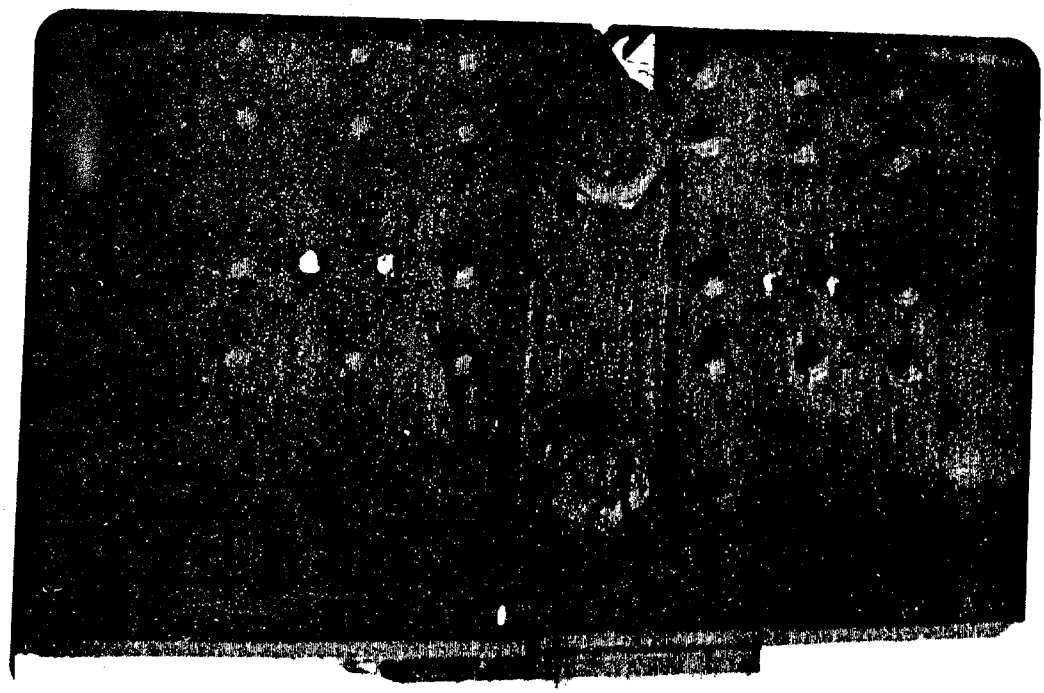

TYPICAL PIN & HANGER CONNECTION

FIGURE 69
DETECTION OF CRACK
USING DYE PENETRANT TEST

FIGURE 70

TRUSS PIN AND HANGER

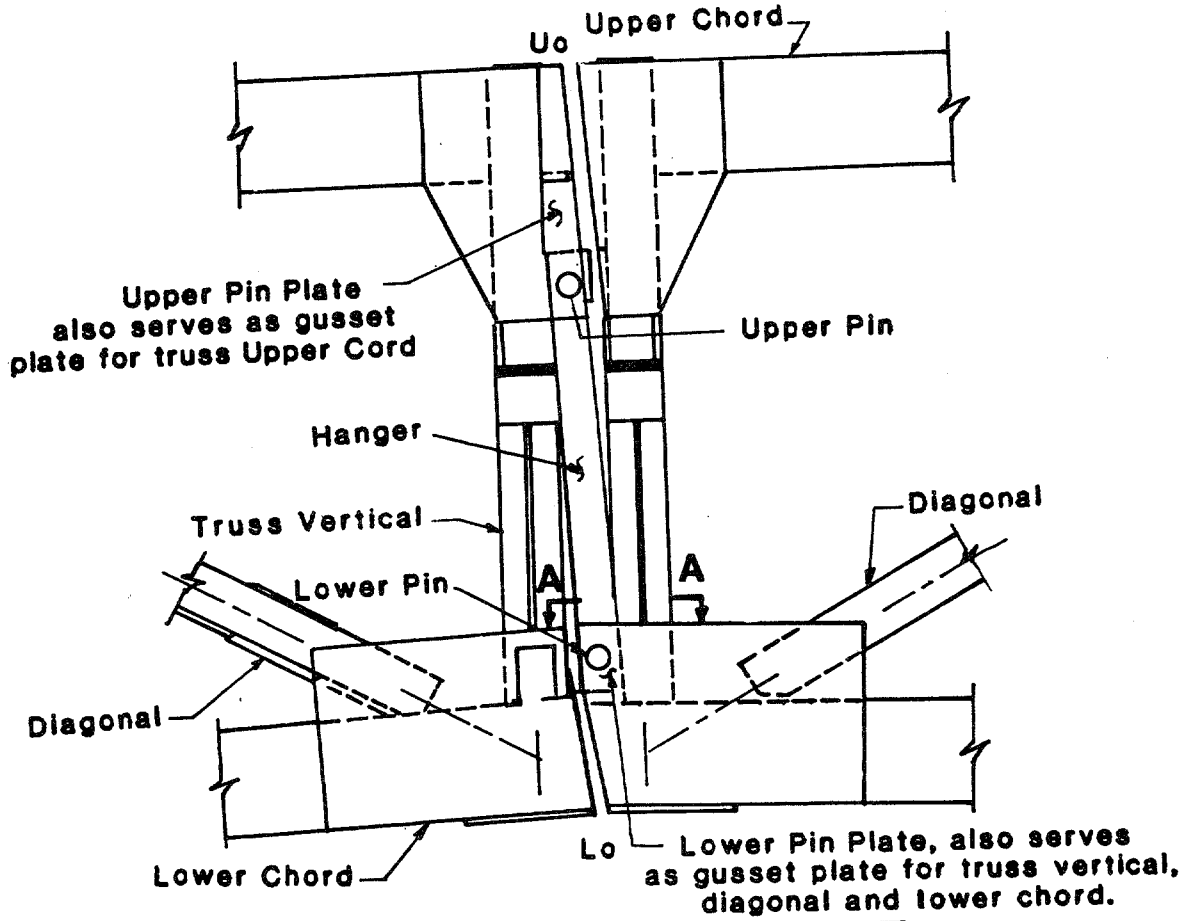

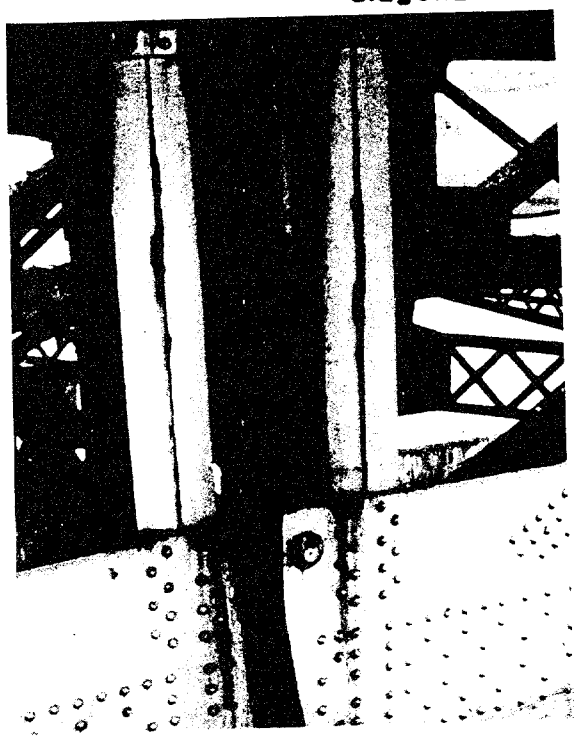

FIGURE 71
PIN AND HANGER

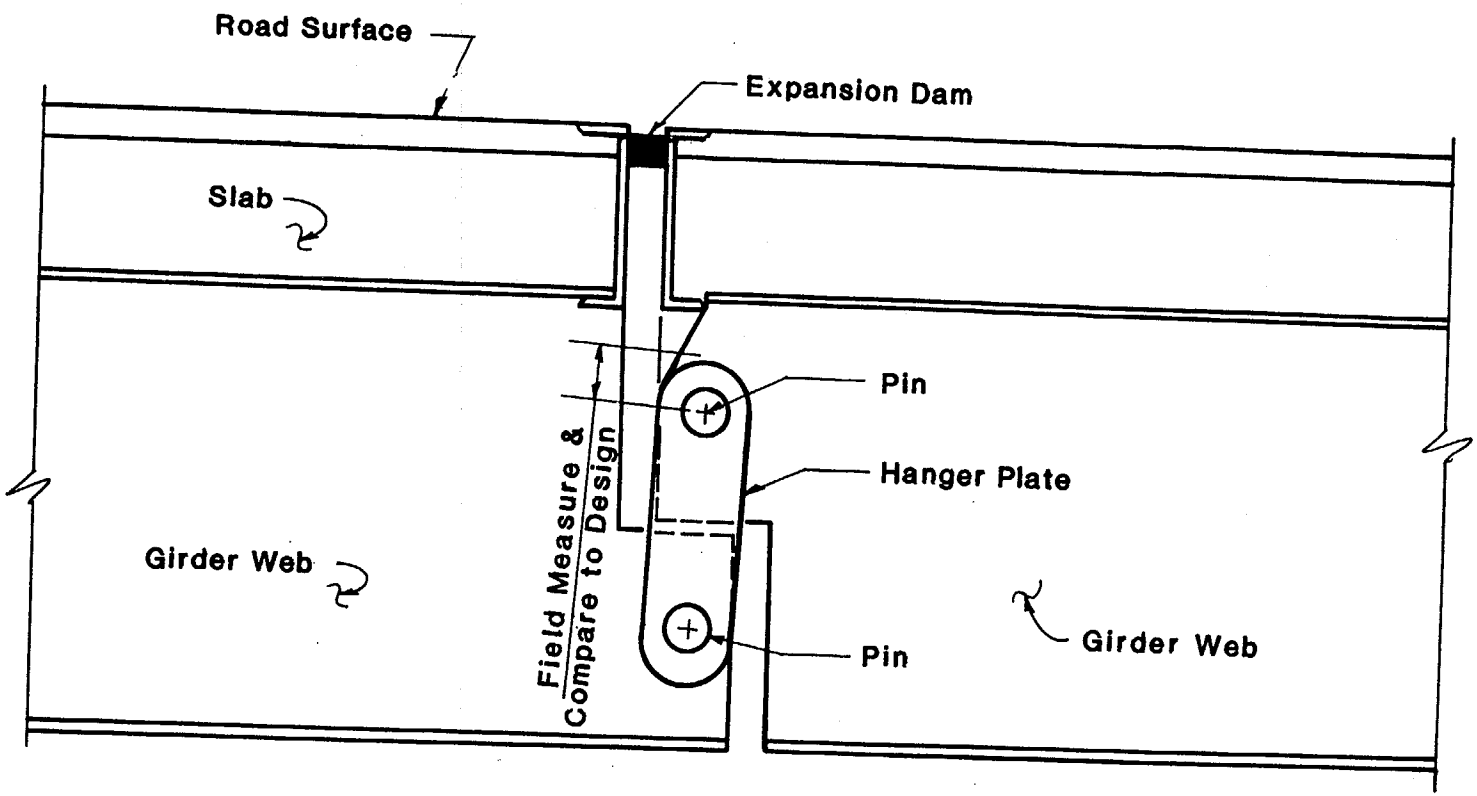

Check both sides of the plate for cracks due to bending of the plate from a frozen pin connection. Figure 69 illustrates a typical crack introduced by this type bending.

(2) Observe the amount of corrosion build-up between the webs of the girders and the back faces of the plates.

(3) Check the hanger plate for bowing or out-of-plane movement from the webs of the girders. Any welds should be checked for cracks.

If the plate is bowed, check carefully at the point of maximum bow for cracks which might be indicated by a broken paint film and corrosion.

b. Pin. Rarely is the pin directly exposed in a pin and hanger connection and as a result its inspection is difficult but not impossible. By carefully taking certain measurements, the apparent wear can be determined. If more than 1/8 inch net section loss has occurred, it should be brought to the attention of the bridge engineer in charge of that structure at once. Several types of pin and hangers and the manner for measuring wear on each are discussed in the following paragraphs.

(1) Girder Pin & Hanger. Wear to the pins and hangers will generally occur in two locations, at the top of the pin and top of the hanger on the cantilevered span and at the bottom of the pin and the bottom of the hanger on the suspended span. Sometimes wear, loss of section, or lateral slippage may be indicated by misalignment of the deck expansion joints or surface over the hanger connection. The following inspection procedure should be used. Figure 71 can be used as a reference sketch.

(a) Locate the center of the pin.

(b) Measure the distance between the center of the pin and the end of the hanger.

(c) Compare to plan dimensions, if available. Remember to allow for any tolerances as the pin was not machined to fit the hole exactly. Generally, this tolerance will be 1/32 inch.

If plans are not available, compare to previous measurements. The reduction in this length will be the <u>apparent</u> wear on the pin.

(2) Fixed Pin & Girder. Wear will generally be on the top surface of the pin due to rotation from live load deflection and tractive forces as illustrated in Figure 72. The following steps should be used:

(a) Locate the center of the pin.

(b) Measure the distance between the center of the pin and some convenient <u>fixed</u> point, usually the bottom of the top flange.

FIGURE 72
FIXED PIN

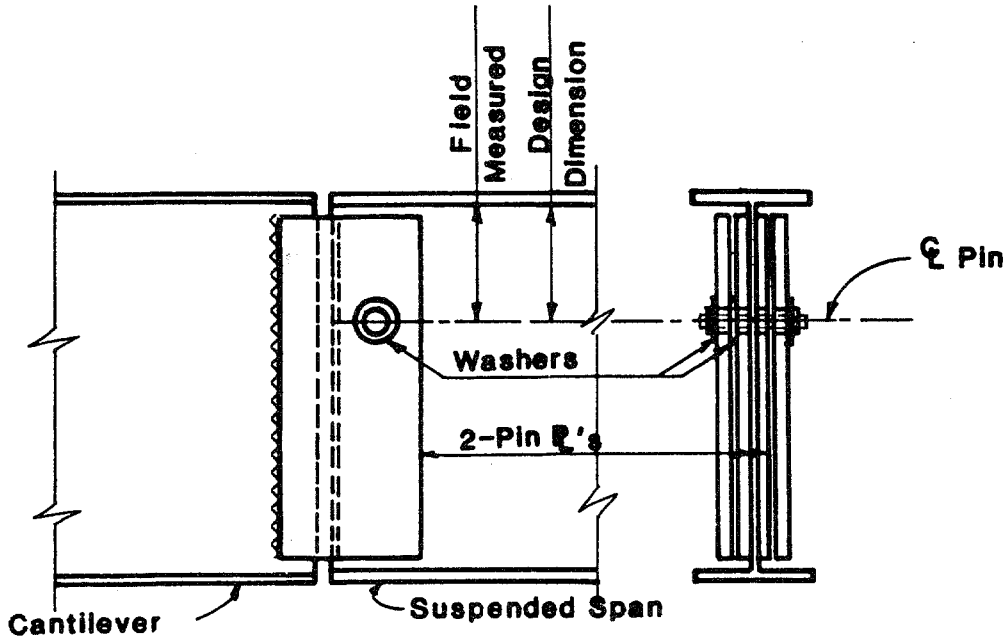

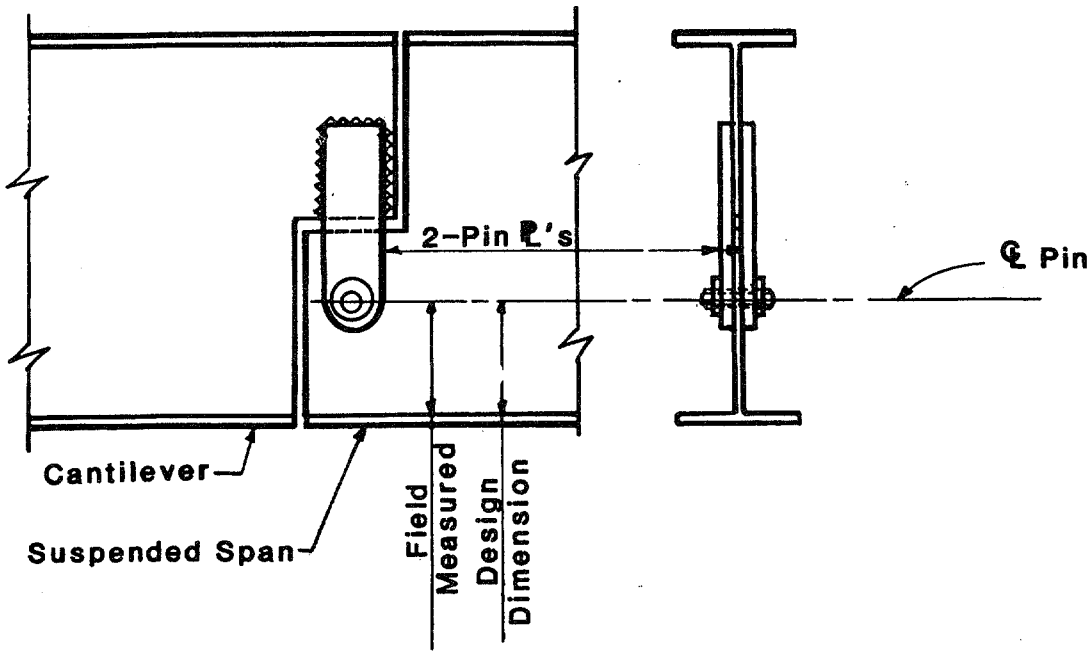

(c) Compare this distance to the plan dimensions and determine the amount of section loss.

(3) Truss Pin and Hanger. Pin and hanger arrangements are slightly different when used in trusses. Usually the hanger plates are compact members similar to a vertical or diagonal. The hanger then slips between gusset plates at both the upper and lower chords as previously shown in Figure 70. It is more difficult to find a fixed reference point because the gusset plate dimensions are not usually given on design plans, but two recommended options are the intersection of the upper or lower chord and nearest diagonal or the edge of the gusset plate along the axis of the hanger. Both these points will provide readily identifiable reference points which can be recreated easily by the next inspection team. For this reason, measurements should be carefully documented along with the temperature and weather conditions. The inspection procedure should include:

(a) Locate center of pin.

(b) Measure to reference point to determine section loss.

(c) Compare to plans or previous inspection notes.

4-4.3 Cross Girder Pier Caps.

Steel cross girders are usually used in bridge substructures when there are clearance requirements which prohibit concrete members or for aesthetic reasons. Their failure would generally cause the collapse of the supported span and hence they are fracture critical members.

Cross girder pier caps generally sit on concrete columns. They can be either built-up riveted members as in Figure 73 or welded box girders as shown in Figure 74.

a. Riveted

(1) Check all rivets and bolts to determine that they are tight and that the individual components are operating as one. Check for cracked or missing bolts, rivets, and rivet heads.

(2) Check the member for misplaced holes or repaired holes that have been filled with weld metal. These are possible sources of fatigue cracking.

(3) Check the area around the floor beam and lateral bracing connections for cracking in the web due to out-of-plane bending.

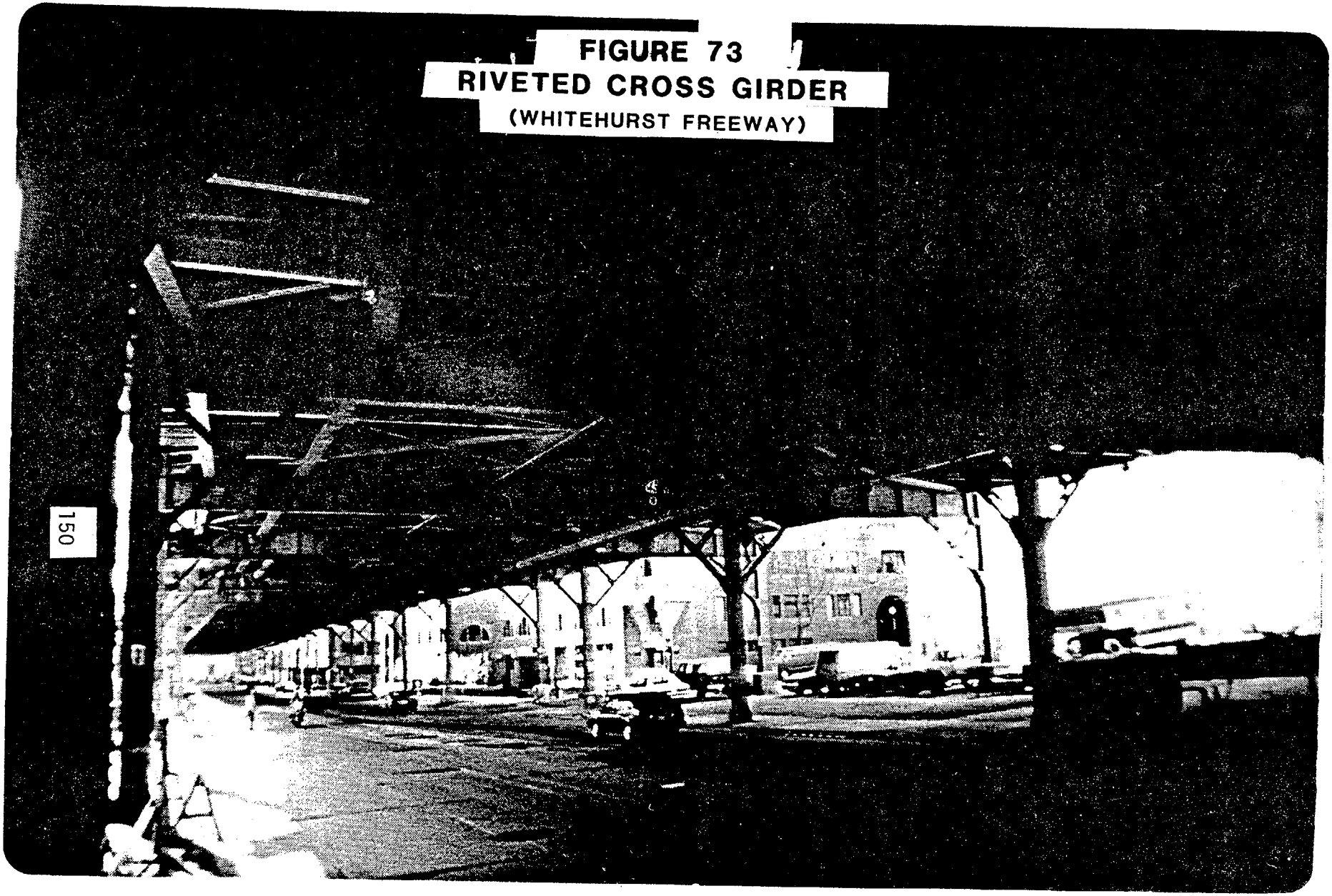

FIGURE 73
RIVETED CROSS GIRDER
(WHITEHURST FREEWAY)

FIGURE 74
WELDED BOX GIRDER

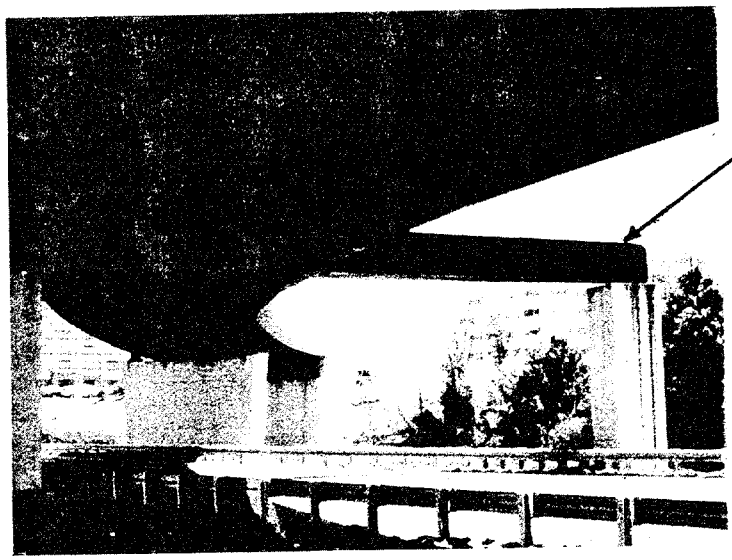

Transverse boxgirder at entrance to Fair Oaks Mall

Route I-66 and Route 50, Fairfax County, Virginia

(4) Check the entire length of the tension flanges and web for cracking which may have originated from corrosion, pitting or section loss, or defects in fabrication (e.g., nicks and gouges in the steel).

(5) Check entire length for temprorary erection welds, tack welds, or welded connections not shown on the design drawings.

b. Welded

(1) Check all transverse groove welds for indication of cracks, especially near backup bars.

(2) Check all transverse stiffeners and connection plates at the connection to the web, particularly at floorbeams and lateral bracing where out-of-plane bending is introduced.

(3) If longitudinal stiffeners have been used, check any butt weld splices in the longitudinal stiffeners. The web at the termination of longitudinal stiffeners should also be checked carefully.

(4) If cover plates are present, check carefully at the terminus of each.

(5) Observe any area of heavy corrosion for pitting section loss or crack formation

(6) If girders have been haunched by use of insert plates, observe the transverse groove welding between the web and insert plate.

(7) Check longitudinal fillet welds for possible poor quality or irregularities that may cause cracking to initiate. This is especially important during the first inspection of the member so that defects can be recorded and properly documented on follow-up inspections.

(8) Check for cracks at any intersecting fillet welds. If triaxial intersecting welds are found on a FCM they should be reported and carefully examined in future inspections.

(9) Check any plug welds.

(10) Check bolted splices for any sign of cracks in girders or splice plates and look for missing or cracked bolts.

(11) Check the entire length of the tension flanges and web for cracking which may have originated from corrosion, pitting or section loss, or defects in fabrication (e.g., nicks and gouges in the steel).

(12) Check entire length for temporary erection welds, tack welds, or welded connections not shown on the design drawings.

4-4.4 Truss Tension Members.

Trusses are considered non-redundant because the failure of certain members will usually result in collapse of the structure. There are, however, isolated cases where a member has failed and the load was picked up by adjacent bracing and the floor system. This is, however, so rare that tension members in trusses should be considered fracture critical members unless a competent structural engineer has made an analysis for a more detailed determination. Tension members may be chords, diagonals or verticals depending on the truss arrangement.

a. Riveted or Bolted Members. The advantage of riveted or bolted members is that they are internally redundant and a fracture in one channel or angle will not spread throughout the member. Figure 75 illustrates a typical riveted truss bridge. The inspection procedure should include:

(1) Check each component to see that the loads are being evenly distributed between them by attempting to vibrate the members by hand and that batten plates and lacing are tight. If the loads are being unevenly distributed, one component might be loose or not have the right ring to it when struck with a hammer.

FIGURE 75

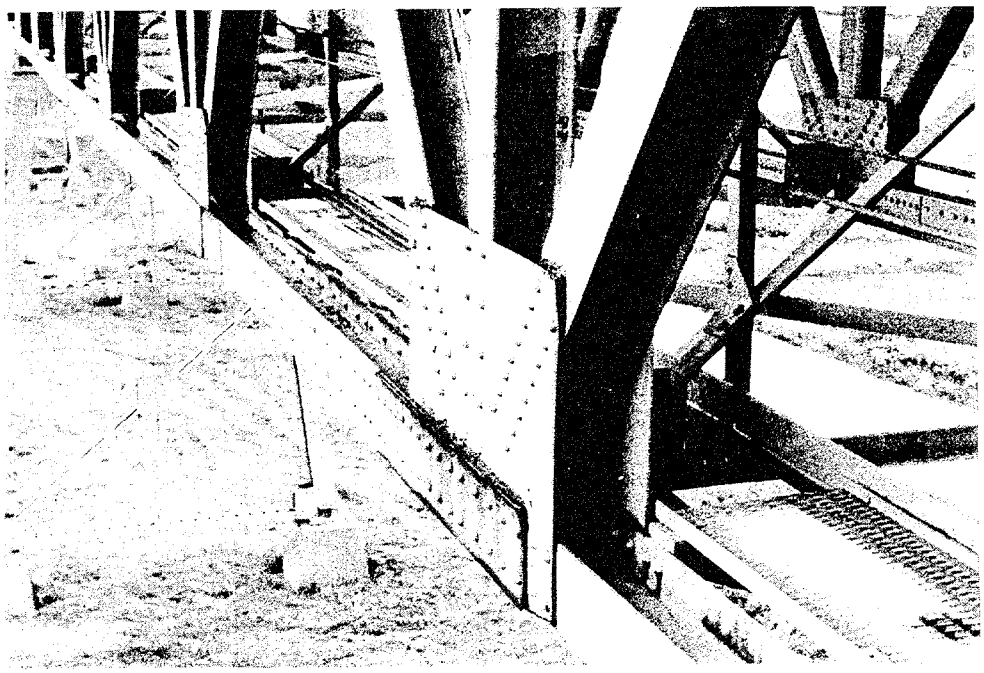

RIVETED TRUSS

FIGURE 76

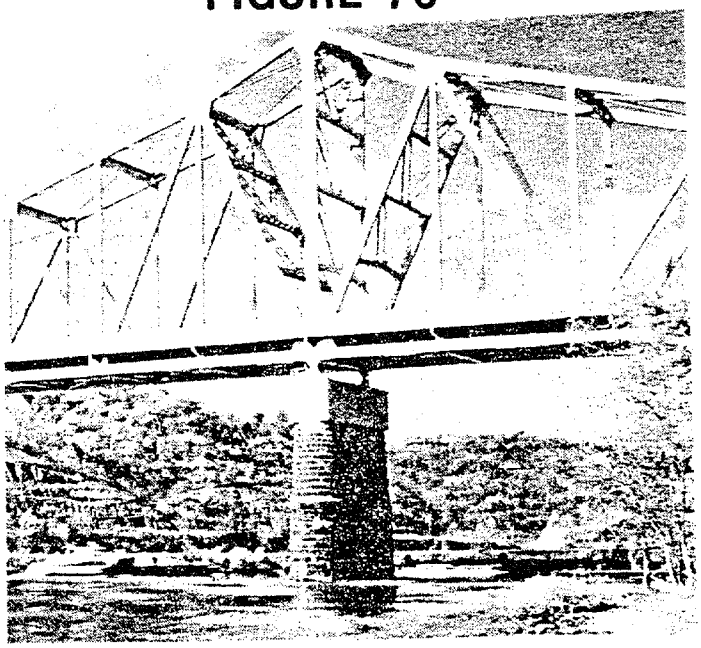

WELDED TRUSS

(2) Check carefully along the first row of bolts or rivets for cracking as the first row carries more load than succeeding rows. The first row is the row closest to the edge of the gusset plate and perpendicular to the axis of the member.

(3) Check for nicks, gouges and tears due to impact from passing vehicular traffic. This type of damage can initiate future cracks.

(4) Observe carefully any tack welding used either in construction or repair as this is a potential source of cracks. Any tack welds should be flagged to the attention of the bridge engineer in the report for future observation and consideration in stress rating.

(5) If any misplaced holes or holes used for reconstruction have been plug welded, check carefully for fatigue cracks.

b. Welded Members. More modern trusses tend to be made up of welded box members or H-shapes. As a FCM, total failure may occur if a crack propagates through the entire member. Figure 76 is an example of a welded truss. Inspection procedures should include:

(1) Check all longitudinal welds the full length of each FCM.

(2) Check all joints at the ends of FCMs including gussets.

(3) Check all transverse welding including internal diaphragms in box members.

(4) If connections are welded at gusset plates, carefully check these welds, particularly if any eccentricities observable by eye are involved.

(5) As with bolted or riveted members, check carefully for nicks, gouges and tears due to impact damage and for any repairs made using tack welding.

(6) Box sections or other sections welded with back up bars should be checked carefully for discontinuity in the back up bars.

(7) Portions of members which are difficult to access must be checked for corrosion using mirrors, fiberscopes, or boroscopes.

(8) Members should be examined carefully for any sites of arc strikes.

(9) Check carefully any holes that have been filled with weld metal as these are a source of fatigue cracking.

c. Eyebar Members. Eyebars are usually rectangular bars that have enlarged forged ends which have a hole in them. They are only found in trusses that are pin connected or occasionally in an eyebar chain suspension span. Figure 77 illustrates a typical application of eyebars in the tension chord of a truss. As mentioned previously, whether these members are fracture critical is dependent upon the number of eyebars per member. During the inspection process, the inspector should:

(1) Inspect carefully the area around the eye and the shank for cracks. This is where most failures occur in eyebars.

(2) Examine the spacers on the pins to be sure they are holding the eyebars in their proper position.

(3) Examine closely spaced eyebars at the pin for corrosion build up (pack rust). These areas do not always receive proper maintenance due to their inaccessibility.

(4) Evaluate weld repairs.

(5) Check to determine if any eyebars are loose (unequal load distribution) or if they are frozen at the ends (no rotation).

FIGURE 77
EYEBAR TRUSS MEMBERS

Eyebar bottom chord on local road bridge

in Pennsylvania

(6) Check for any unauthorized welds and include their locations in the report so that the engineer can analyze the severity of their effect on the member.

d. Counters. When two diagonals cross in the same panel of a truss, they are called counters. If they are on a large truss, they are composed of bolted or riveted members, and the procedure previously described should be used for inspection. On smaller trusses, they are usually made of looped rods or eyebars with turnbuckles in the center. The turnbuckles are used to adjust the tension in the individual members. As shown in Figure 78, the counters are the x-shaped members in the two center panels. The inspector should:

(1) Check the looped rod for cracks where the loop is formed.

(2) Observe the counters under live load for abnormal rubbing where the counters cross, and check this area carefully for wear.

(3) Examine the threaded rods in the area of the turnbuckle for corrosion and wear.

(4) Test the tension in each rod to be sure they are not over-tightened or under-tightened. The relative tension can be checked by pulling transversely by hand. The inspector should not adjust the turnbuckle, but report the problem.

FIGURE 78
DECK TRUSS WITH COUNTERS

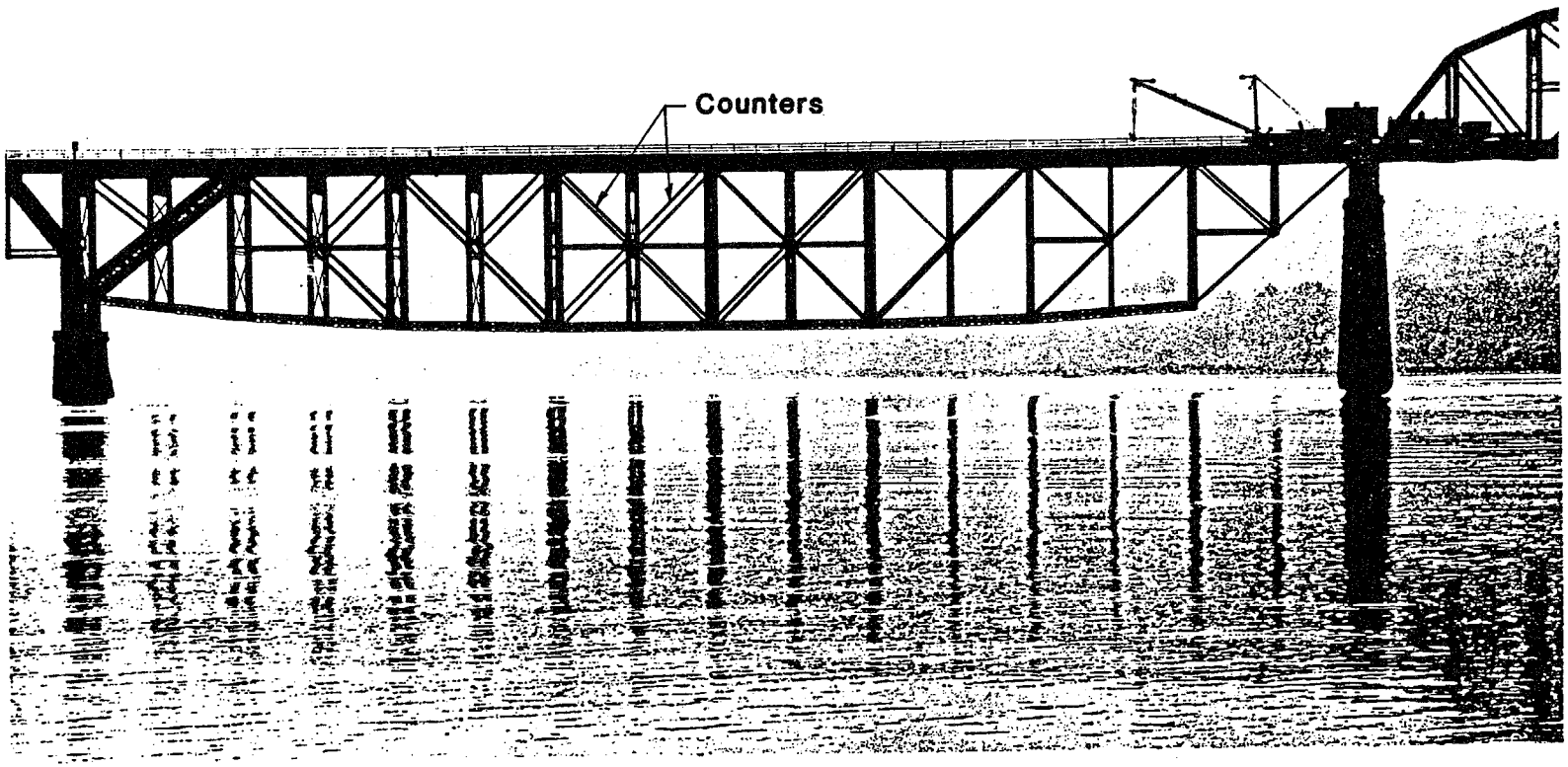

Railroad bridge over the Susquehanna River makes extensive use of counters.

4-4.5 Tied Arches.

A tied arch is an arch that has a structural tie built between the reaction points to take the horizontal thrust. This is shown schematically in Figure 17. The stability of the arch is dependent on the structural tie which is in tension. Therefore the tie is classified as a fracture critical member. Figure 79 illustrates several tied arches in series. The tie is the box member stretching between bearings. The majority of tied arch bridges built in the last decade have experienced some problems in the tie.

a. Riveted or Bolted Members. As with any FCM, the advantage of a riveted or bolted member is that they are internally redundant. Inspection should include:

(1) Observe built-up members to assure that the load is being evenly distributed to all components and that batten plates, lacing and ties are tight. If members are loose or do not ring properly when struck with a hammer, loads may be distributed unevenly.

(2) Check the bolts or rivets at all connections (hangers, floorbeams, and end reactions) for cracks. All tack welds and/or strikes should be brought to the attention of the engineer for proper evaluation.

FIGURE 79

TIED ARCH

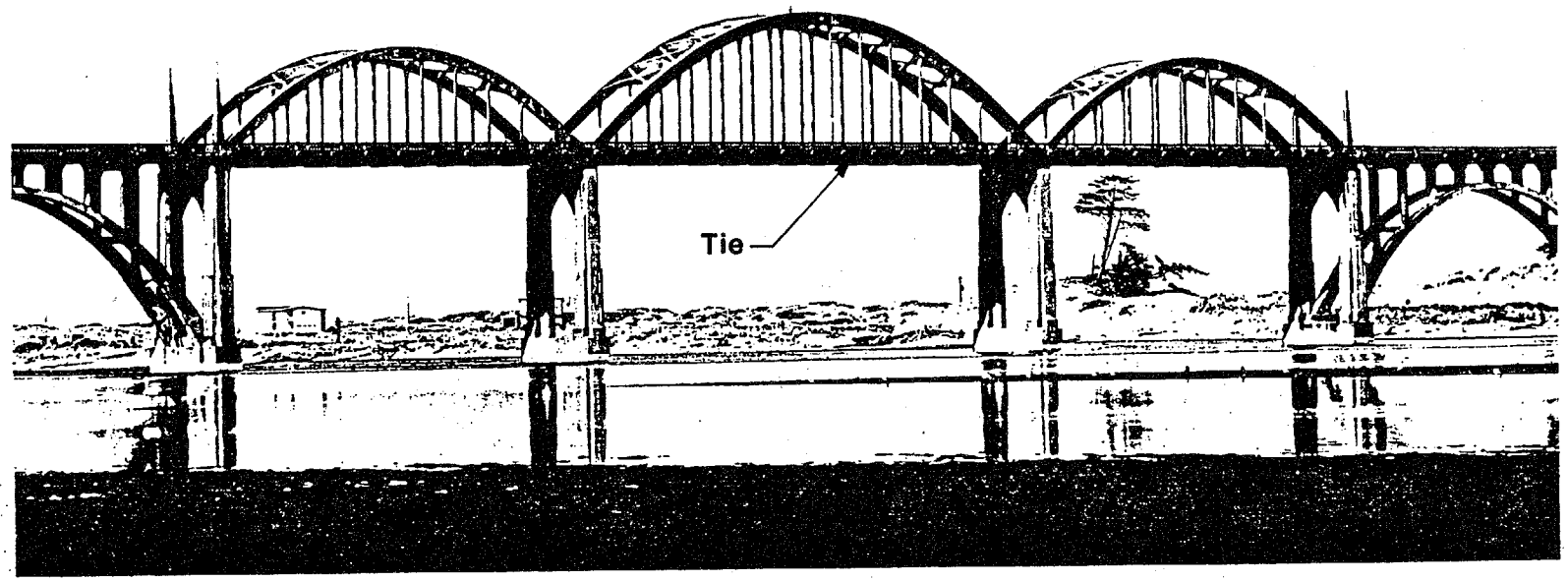

(3) Observe if any repairs or construction techniques have made use of tack welding and check carefully for cracks. All tack welds and/or strikes should be brought to the attention of the engineer for proper evaluation.

(4) Check the area around the floorbeam connection for cracks due to out-of-plane bending of the floor beam and for cracks in rivet and bolt heads due to prying action.

(5) Check for corrosion sites with potential loss of section. This is particularly important in the inside of box-shaped members.

b. Welded Members. The same problem exists here as on any welded tension member, a crack will tend to propagate through the entire member. Most tied arches built in recent years with welded ties are of a size such that the tie is large enough so that access to the inside of the tie is possible. The inside of the box member should be checked for oxygen and/or toxic gases. Provisions should be made for oxygen or fresh air supply. The plans for the tie need to be reviewed in detail so that the degree of access is known beforehand. The tie may also be of such size that it is necessary to use a ladder on the inside. The key locations in the tie girder are the floor beam connections, the hanger connections, and the

knuckle area (area at the intersection of the tie girder and the arch rib). The inspections steps should include the following:

(1) Check all welds carefully for the entire length of the member. This applies primarily to the corner welds where the web and flange plates are joined. Depending on the results of the corner weld inspection, it may be desirable to remove the backing bars and re-examine the welds. All fillet welds inside the girder should be inspected visually as accessible. Wire brushes should be used to clean the welds as necessary. The inspector should look for triaxial intersecting welds, irregular weld profiles and possible intermittent fillet welds along the backup bars.

(2) Locate and inspect all the internal diaphragms and transverse butt welds. It may be necessary to clean the welds using a power wire brush.

(3) Check transverse connections at floor beam with particular care. The usual location of the crack is near the corners, particularly if there is any gap between the floor beam diaphragm and the web plates. This is a good place to clean with a power wire brush and use a dye penetrant test to ascertain the presence of cracks.

(4) If the box section has been welded with backup bars in the corners, as is often the case, the backup bars should be carefully examined for any breaks or poor splices.

(5) Portions of members that are difficult to access must be checked for corrosion using mirrors, fiberscopes, or boroscopes.

(6) Hanger connections should each receive a thorough and detailed check. The purpose is to locate any cracks or local distortions and to evaluate the extent of rusting or deterioration. These connections are where the support from the arch rib connects to the tie, and ordinarily, the floor beams at the same location.

(7) The knuckle area at the intersection of the arch tie and arch rib is extremely complicated structurally and physically. Considerable study may be necessary to determine how to inspect all of the necessary locations in this area. Again, it may be necessary to use mirrors or other types of special apparatus. Again, dye penetrant testing should be used in this area if any suspicious crack-like formations are observed.

(8) At floor beam connections and any splice points where the splices have been made with bolts, all of the bolts should be checked for tightness.

4-4.6 Suspension Spans

There is a general procedure for inspection of suspension spans given in BITM 70. Generally an expert with suspension bridge experience is needed to adequately evaluate these structure types. Therefore, this manual will be limited to the inspection of the primary fracture critical element, the primary cables. There are two main types of suspension spans and one addition developing type to consider with regard to fracture critical member inspection. They are the eyebar chain suspension span, the cable suspension span, and in addition their first cousin, the cable stayed bridge. The eyebar chain and cable are the fracture critical parts of the suspension spans. The eyebar chain is rather rare but some may be found in service today. The cable suspension bridge is more likely to be found and is considered a more modern type of construction. The cable stayed bridge was developed in the 1970s and is used with increasing frequency today.

a. Eyebar Chain. Eyebars used in a chain suspension span are very similar to those in a truss. The same inspection care should be used on a suspension chain as that used on the truss chord. An example of an eyebar chain suspension bridge is shown in Figure 80. The inspection process should include:

(1) Inspect carefully the area around the eye and the shank for cracking.

FIGURE 80

EYEBAR CHAIN SUSPENSION BRIDGES

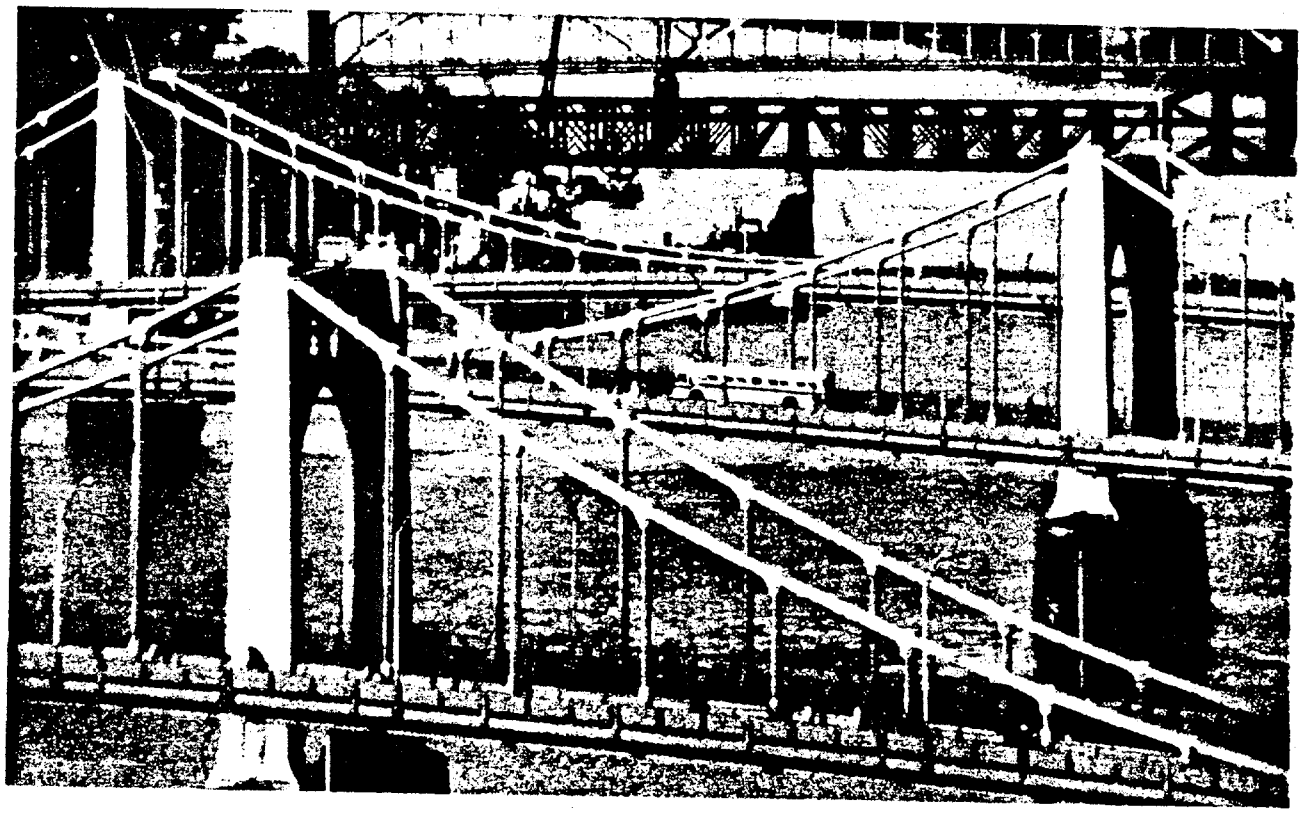

(2) Examine the spacers on the pins at the end of each eyebar to be sure they are holding the eyebars in their proper position.

(3) Observe the eyebars under live load to assure that the load is distributed evenly to each member of the link.

(4) Examine closely spaced eyebars at the pin for corrosion buildup (pack rust) between each member.

(5) Look for weld repairs.

b. Cable. Most suspension bridges are supported by a cable made of a large number of parallel wires spun together and wrapped with a protective coating. A cable suspension bridge is shown in Figure 81. Smaller and lighter spans may be supported by helical bridge cable. Figure 22 shows parallel strand cable and helical strand cable. The normal practice for protective coating is to wrap the strands with galvanized wire and then paint the wire (see Figure 82). The following check list, taken from the Appendix of "Inspection, Prevention, and Remedy of Suspension Bridge Cable Corrosion Problems," by Theodore Hopwood, II, and James A. Havens, provides an excellent procedure for inspecting suspension bridge cables.

FIGURE 81
CABLE SUSPENSION BRIDGE

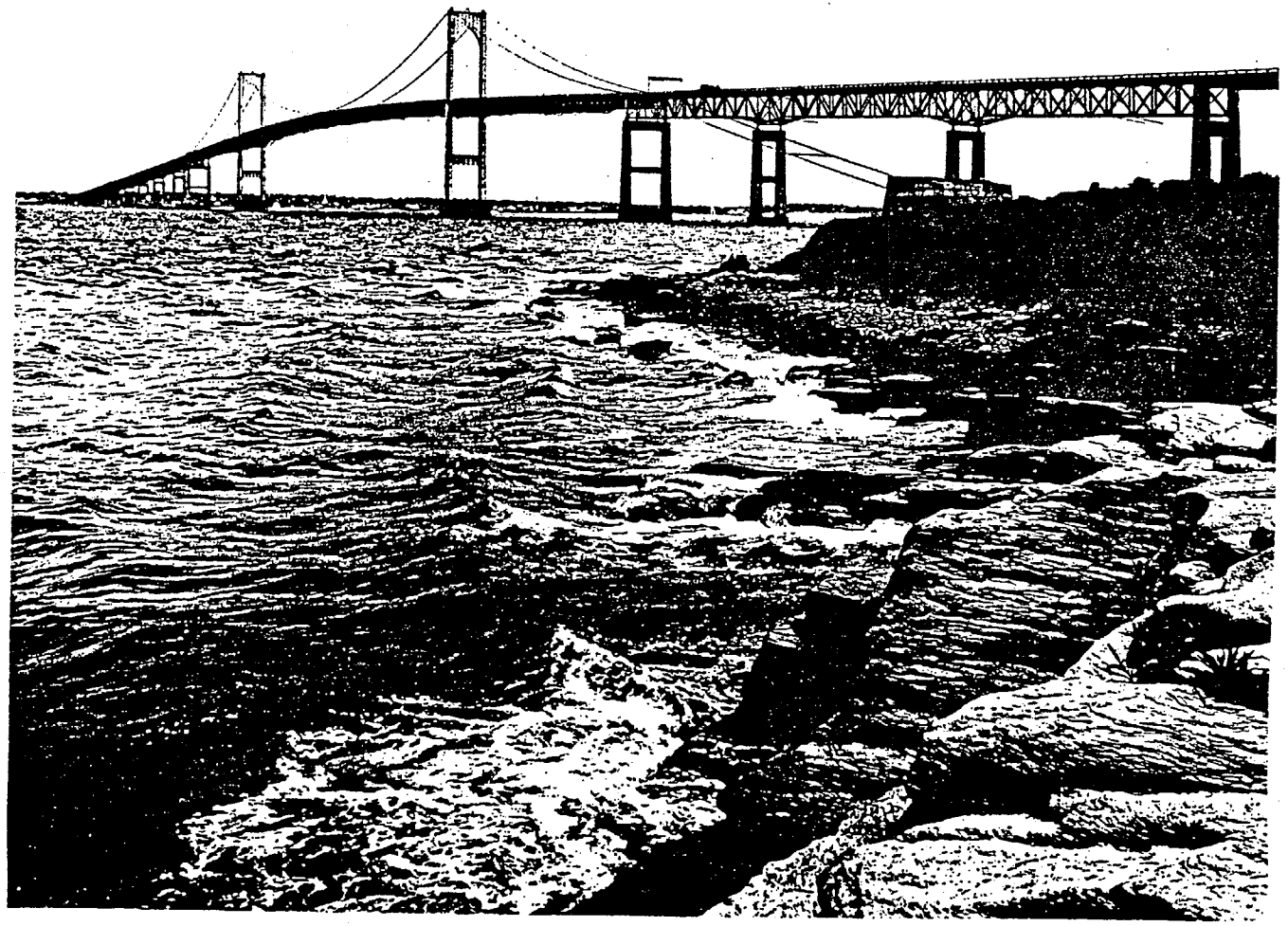

CHECKLIST FOR ASSESSMENT OF CORROSION DAMAGE TO SUSPENSION BRIDGE MAIN CABLES

A. EXTERIOR CABLE SURVEY

1. Review drawings of the bridge, including major components such as bands and anchor assemblies.
2. Inspect cables externally by performing the following tasks:
   a. Walk the cables to check condition of paint, locate any gaps in the wrapping, and inspect the band packing.
   b. Inspect the underside of the cables with binoculars to check for rust stains, water leakage from the cables, chipped paint, and band packing pop-outs.
   c. Check for presence of drains in the packing on the underside of the banks.
3. Note all wrapping disturbances or signs of possible corrosion problems in the cables on sketches of the bridge.

B. CABLE INTERIOR WIRE CORROSION ASSESSMENT

1. Review exterior cable survey sketches to select portions of the main cables to be subject to interior inspection. Rank severity of indications as follows:

   1. rust stains,
   2. water leakage from the cables
   3. chipped paint on undersides of the cables,
   4. bank pop-outs,
   5. paint or wrapping failures on topside of cable (those can be the most important indication if the failures are severe).

2. Select at last four locations per cable for interior wire corrosion assessment (the locations should vary along each cable -- select at least one location near midspan of the bridge for each cable).
3. Install cable inspection port or alternatively strip all wrapping from the cable along a panel (band-to-band) at each designated inspection location.
4. Visually inspect the interior wires and strands.
5. Note and record the progression of corrosion on the wires.
   a. If Stage 3 or 4 corrosion exist, inspect the lowest outer strands for corrosion cracking in the wires.
   b. If Stage 4 corrosion is detected, consider stripping the remaining wrapping from the panel, if the inspection report is employed, and also consider stripping the wrapping from adjacent panels.
   c. If Stage 4 corrosion is detected, consider inspecting interior strands by wedging the lower strands apart.
   d. If cracked wires are detected, unwrap the adjacent panels and inspect them for broken wires.

6. Reseal the cables.
7. Review the inspection results and determine the need for more extensive inspections or remedial work.

C. ANCHOR HOUSE INSPECTIONS

1. Review drawings of the anchorages and details.
2. Inspect exterior of anchor house including cable entrance (usually the splay saddle).
3. Inspect the interior of the anchor chamber for signs of excessive moisture.
4. Examine the splay saddle for signs of washing of debris or rust from the cables.
5. Determine the corrosion condition of the wire in the anchor chamber.
   a. If Stage 3 or 4 corrosion is detected, closely inspect the wires for corrosion cracking.
   b. Inspect the strand socket openings for signs of wire corrosion (if prestranded wire is employed).
   c. Inspect wires along the looped ends, including tangent points at the strand shoes (if spunwire is employed).
   d. Record corrosion damage found on the wires and signs of excessive moisture in the anchorage chambers.
6. Review the inspection results to determine the need for further inspection and remedial work."

The stages of corrosion referred to in the check list are described by Mr. Hopwood and Mr. Havens in"Corrosion of Cable Suspension Bridges" as follows.

"Deterioration of galvanized helical strand was observed to occur in four stages. In stage one, the strand wires were shiny with random signs of zinc corrosion. During stage two, the zinc would be partially corroded revealing a white corrosion product, but no ferrous rust would be present. In stage three, the zinc would be depleted with occasional spots of ferrous rust. During stage four

the zinc corrosion product would be largely displaced by ferrous rust. Cracking was possible during stage three and cold be expected during stage four."

Figure 82, shows stage 2 corrosion. Figure 83, shows stage three corrosion. Figure 84, shows stage four corrosion.

Inspection ports should be installed at critical points in the cable so that they can be used in future inspecting for direct access to the cable unobscured by the protective wrap.

c. Cable stayed. The primary structural element for cable stayed spans may be a box girder (concrete or steel) or a truss system (two or more trusses). In any case, the primary longitudinal support elements are further supported by cables from a tall pier. These cables are the fracture critical parts for this type of structure. Prior to inspection an engineer, who is knowledgable in the design, construction, and operation of stayed girders, should review this type of structure to select and give priority rating to areas which are fracture critical.

The inspection of the cable stays can be accomplished by the same procedures given for Cable Suspension Bridges. The other structural elements, Box Girders or Trusses, have been discussed previously.

FIGURE 82

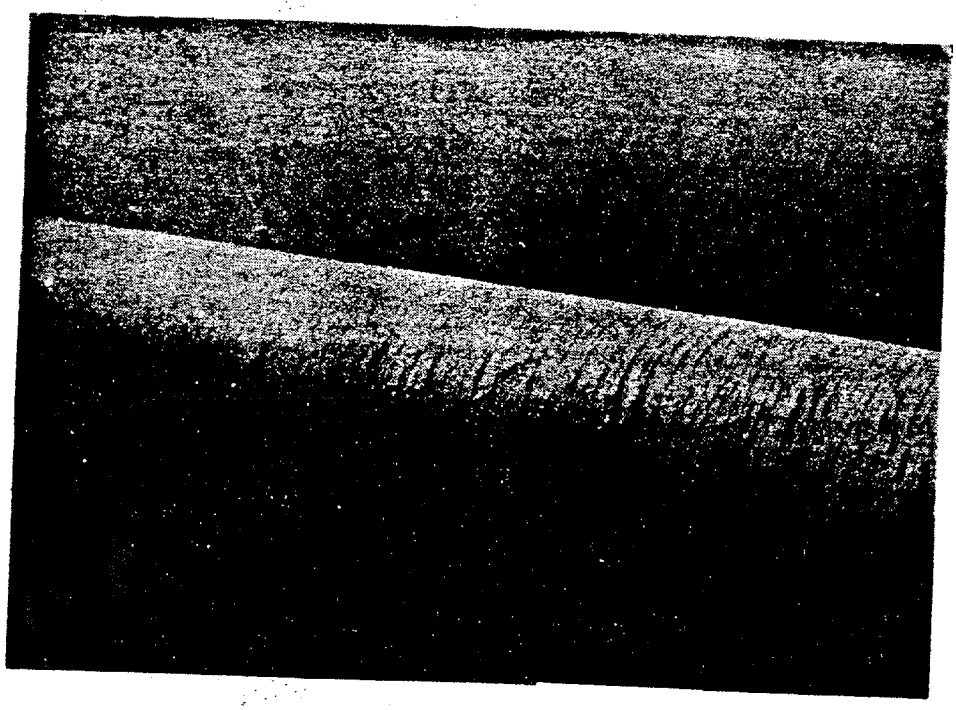

Early Paint Failure on Topside of the Cable Wrapping: Maysville Bridge (1980).

More Extensive Paint Deterioration on Cable Wrapping: Maysville Bridge (1983).

Source: (42)

FIGURE 83

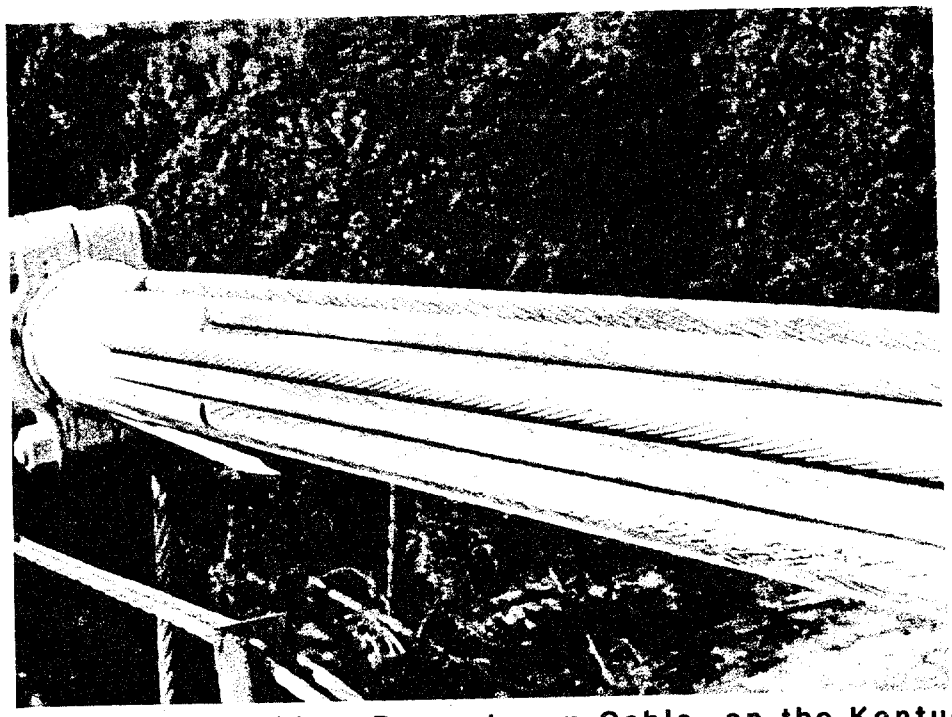

The Portsmouth Bridge, Downstream Cable, on the Kentucky Sidespan (Mainly Stage 2 Corrosion Damage) (1979).

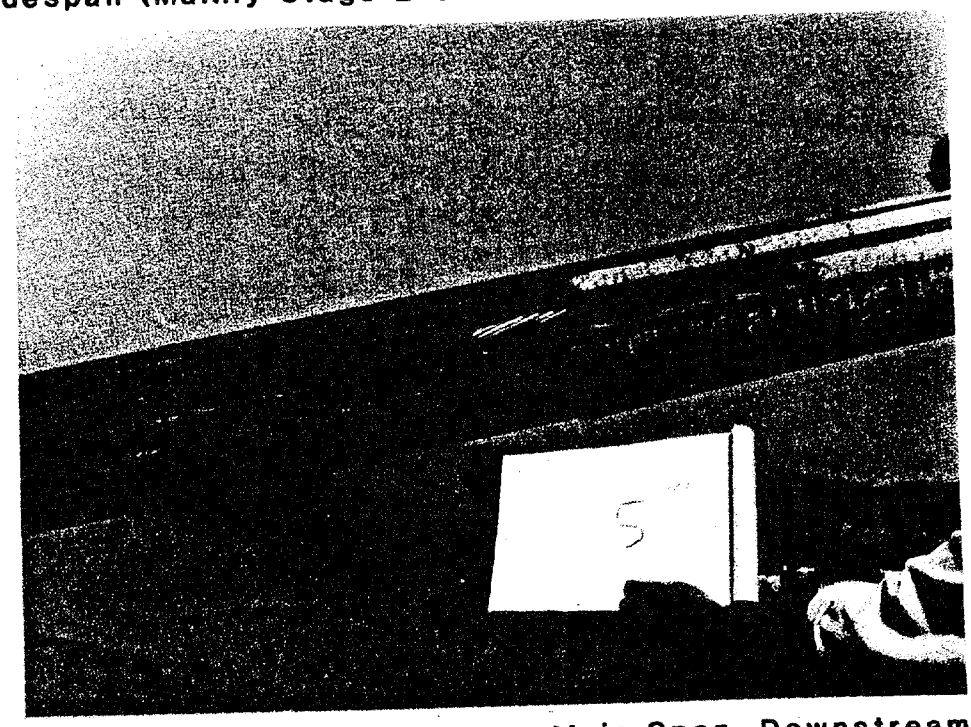

Stage - 4 Deterioration on the Main Span, Downstream Cable, also Exhibiting Signs of Washing (1979).

Source: (42)

FIGURE 84

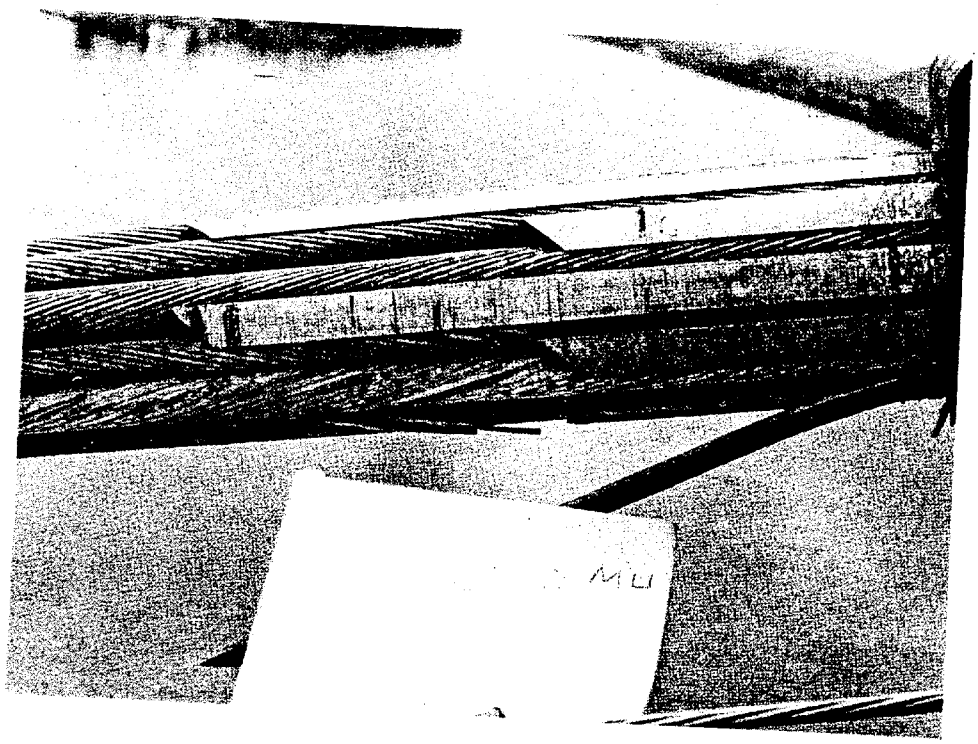

Wire Fractures Adjacent to a Cable Band (Strands Show Signs of Early Stage 3 Deterioration) (1979).

Source: (42)

4-4.7 Concrete Bridges

a. General. Neither reinforced concrete nor prestressed concrete members are fracture critical in the sense that they develop fractures from overstress of a single element of steel which leads to collapse. Internal redundancy is always present because of the presence of numerous reinforcing bars in reinforced concrete and numerous strands in prestressed concrete. The fracture of one strand or bar, while of serious concern, will not usually result in fracture of the concrete member.

A false sense of security for concrete bridges because of their internal redundancy should be avoided. This is particularly true in view of the increasing complexity and variety of concrete bridge construction such as exhibited in segmental concrete box girders.

A thorough inspection of nonredundant concrete members in tension should be conducted routinely since problems in the reinforcement bars or strands may progress for some time before visible cracking occurs. Moisture and corrosive contaminates penetrate concrete members causing section loss to the embedded steel. This loss cannot be readily measured or monitored as on a steel bridge. The inspector should look for and document early signs of this problem and monitor the condition during subsequent inspections. Ideally, an appropriate waterproofing or corrosion protection system can be installed to prevent or arrest damage in the concrete member before an overstressed condition occurs.

In summary, the bridge inspector should be alert to the use of concrete in nonredundant bridge situations where flexure or shear failures can occur. The redundant/nonredundant criteria are identical to those previously discussed for steel bridges. In both reinforced and prestressed concrete the design specifications are developed to insure failure in the steel in a ductile manner. This design approach should produce visible surface cracks substantially before any sudden failure can occur.

b. What to look for. In concrete bridges the inspector should look for cracks just as with steel bridges. Most conventionally reinforced concrete bridges have numerous hairline cracks in the tension areas. Since these bridges were designed on the basis of a cracked section, these cracks are not ordinarily structurally significant. If they are large they may permit access for moisture or other air borne pollutants to reach the reinforcing steel and accelerate the corrosion process. The corrosion process, of course, will reduce the section available to carry the tensile stress. Prestressed concrete structures (either pre-tensioned or post-tensioned) are designed to be crack free in the tensile stress areas except under maximum or excessive loads. Consequently, any cracks in prestressed bridges should be brought to the attention of the engineer for further analysis. The location and extent of cracks should be noted on sketches attached to the inspection report as an aid to evaluation and for monitoring of the condition of the members.

c. Where to look. Flexural cracks in either reinforced or prestressed concrete would ordinarily be found in the bottom fibers of simple spans near the center of the span and in similar positions in continuous spans with the addition that in continuous spans the flexural cracks could occur in the top fibers over the supports. Shear or diagonal tension cracks are almost always cause for concern and should be brought to the attention of the engineer. They would ordinarily be found near the supports for either simple or continuous construction (see Figure 85). The presence of these cracks may indicate the possibility of imminent collapse in some prestressed concrete bridges. Prompt evaluation by the engineer is needed whenever they are found.

New, prestressed, or reinforced concrete box girders should have a complete careful inspection prior to going into service. The purpose of this inspection is to detect any cracks resulting from special situations not foreseen in the original design. These situations may be related to the construction problems generated by the proceedure used for erection or by flexural stresses, shear stresses, thermal stresses, stress distribution at the anchorages, curved tendons, tendon misalignment, or unanticipated losses. An excellent article on cracking resulting from various special situations is "The Cause of Cracking in Post-Tensioned Concrete Box Girder Bridges and Retrofit Procedures" in the Journal of the Prestressed Concrete Institute, April 1985, by Walter Podolny, Jr.

FIGURE 85

SHEAR CRACK IN PRESTRESSED BEAM

Section 5. NONDESTRUCTIVE TESTING METHODS

4-5.1 General.

There are a number of nondestructive tests available for quantifying cracks in both steel and concrete members. It should be remembered that not any one test will suit all the needs for a given circumstance and that in many cases it will be necessary to use one or more of these tests in conjunction with another. When NDT is required, the testing should be conducted by a person fully qualified in its use.

4-5.2 Steel.

a. Visual. All of the previous discussion has been concerned with visual inspection. It is the obvious method of inspection for which there is no substitute. The following methods are intended as adjuncts to the visual method of inspection.

b. Dye Penetrant Test. The Dye Penetrant Test is effective in finding cracks that are open to the surface of solid materials. For the test to provide the maximum results, the area tested must be free of paint, rust, scale, grease and oily films. The method involves applying an oil-based liquid penetrant which is intended to be absorbed into any cracks present. A sufficient time must be allowed for the penetrant to be entrapped by capillary action at which time

the excess is wiped off and a liquid developer is applied. The developer absorbs the penetrant which has an additive, such as a bright dye, to make detection easier. In the use of this test, it is important to have a clean surface which is free of any foreign material so the penetrant is absorbed into the crack. The crack must not be filled with paint or rust during the cleaning process. This may preclude the use of a wire brush, in particular, where a very small, tight crack is being investigated. Figure 86 illustrates the method of applying the Dye Penetrant Test and Figure 87 illustrates the end result with a revealed crack.

c. Acoustic Crack Detector. The Acoustic Crack Detector (ACD) shown in Figure 88 consists of a backpack and a handheld probe. These units were developed in the early 1970s. The probe can be directed toward the area in question and, using an ultrasonic pulse-echo technique, will detect flaws in the steel as small as 1/4-inch long if the surfaces are relatively clean and special care is taken. The ACD, however, cannot fully define the extent and orientation of a crack and must be used in conjunction with other ND methods to fully quantify any defect found. This equipment is not currently available commercially.

d. Magnetic Crack Definer. Like the ACD, the Magnetic Crack Definer (MCD) shown in figure 89, also comes in the form of a backpack and hand-held probe. The MCD, using magnetic inspection principles, can precisely define the limits of a crack that has been located in a

FIGURE 86

METHODS OF DYE PENETRANT TESTS

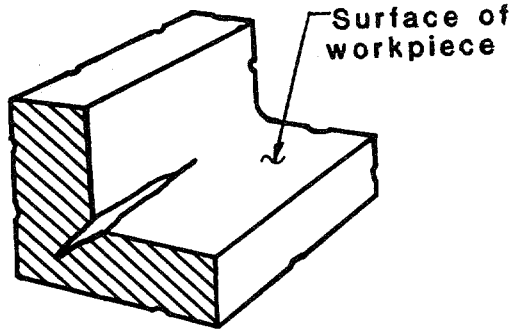

Operation I

Cleaning and drying of surface.

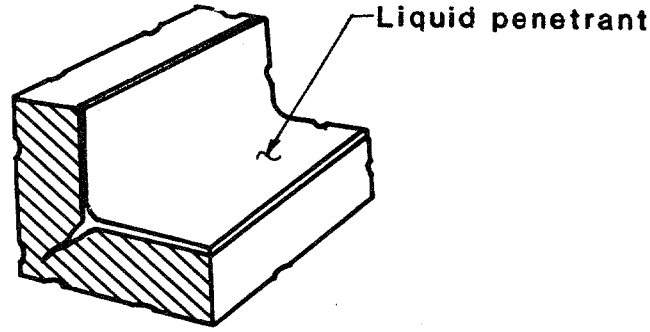

Operation 2

Application of liquid penetrant to surface

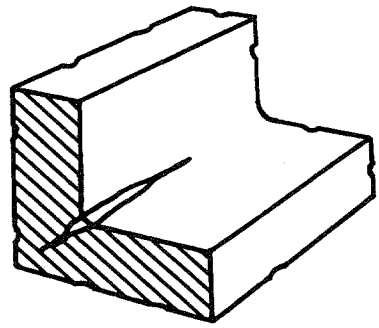

Operation 3

Cleaner removal of liquid penetrant from surface

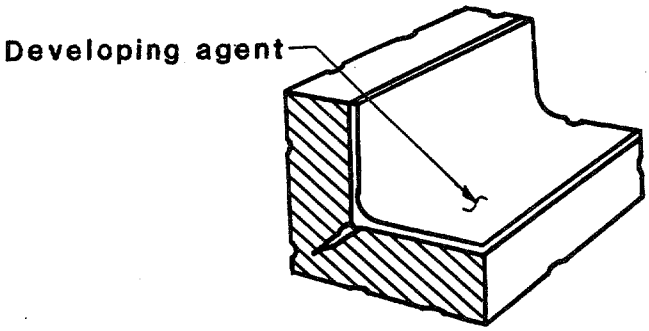

Operation 4

Application of developing agent

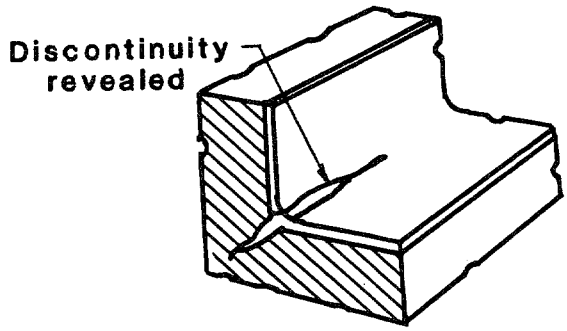

Operation 5

Inspection

FIGURE 87
FATIGUE CRACK REVEALED BY DYE PENETRANT TEST

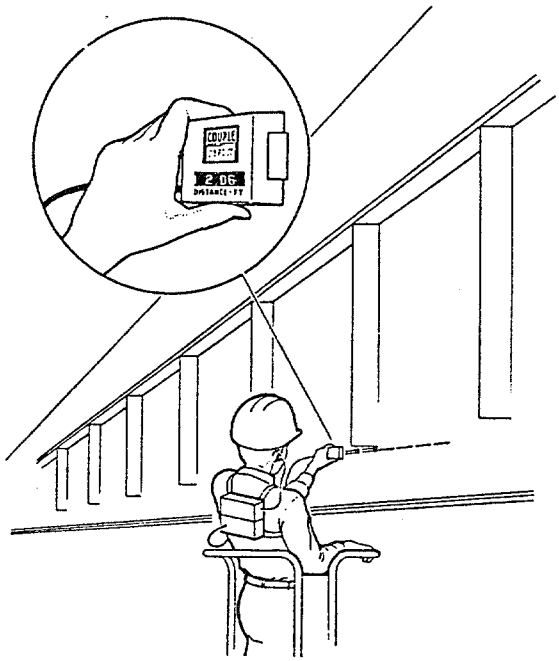

FIGURE 88

Conceptual view of Acoustic Crack Detector (ACD) being used to inspect for fatigue cracks at the toes of stiffener-to-web welds.

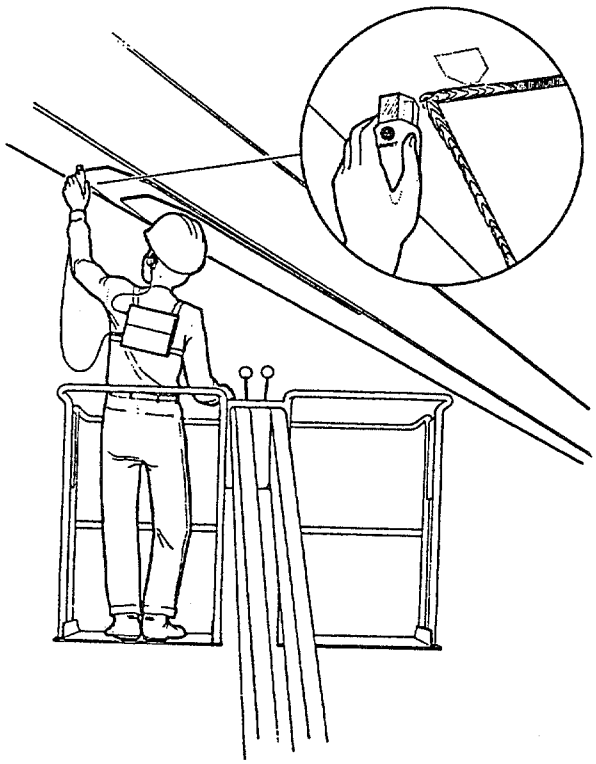

FIGURE 89

Conceptual view of Magnetic Crack Definer being used to determine extent of fatigue crack at toe of coverplate weld.

more general manner, such as with the ACD. By maneuvering the probe back and forth over a suspected crack, the operator can determine its limits. A disadvantage of the system is that it cannot define the depth of a crack in, for example, a butt weld in a flange. This equipment is not currently available for purchase and is not representative of today's state of the art technology.

e. Ultrasonic Testing. Ultrasonic Testing makes use of high-frequency, sound waves, introduced by means of a transducer. This acoustic energy propagates as a wave which reflects off discontinuities, such as fatigue cracks, and travels back to the initiating transducer. The distance to the flaw can be estimated from the known properties of the wave and material being tested. The return signal's magnitude is an indication of the size of the reflecting area, allowing a qualitative measurement of the fatigue crack. Coupling of the transducer requires areas free of paint buildup, scale and rust. In addition, other difficulties involving coupling procedures, surface roughness and harmless imperfections in the steel can tend to hide or obscure signals from small cracks. Ultrasonic Testing requires a highly skilled operator as it is sometimes necessary to reflect the wave off of adjacent areas to reach an otherwise inaccessible target. It can be used for locating both surface and subsurface defects in metals. These defects include cracks, slag and other inclusions, segregation and lamination, gas pockets, flaking and incomplete weld penetration and weld fusion. It can also be used to measure the thickness of a

piece of metal so that the amount of section loss due to corrosion can be determined.

f. Magnetic Particle Testing. In Magnetic Particle Testing, a magnetic field is induced in the steel by means of a moderate size power source. It is important to orientate the magnetic field properly in order to get a good reading on potential flaws and, in complex structures, readings in more than one direction may be required. Detection of a flaw is accomplished by application of inert compounds of iron which are attracted to the magnetic field as it leaves and then reenters the steel in the area of a flaw. Observation of particle alignment can be improved by the addition of fluorescent material and the application of ultraviolet or black light. To perform this test successfully requires a highly trained inspector. No permanent record is made unless the particles are picked up by clear adhesive tape or by suspending the particles in a room temperature curing rubber base. Therefore, in most cases, an interpretation is done at the time of the test and a photograph taken for a record. Two types of particle testing are available, one involving a dry method and the other a wet method. The dry particles are more effective for subsurface flaws and the wet for fine and shallow flaws. Both methods are difficult to apply during adverse weather conditions and are not usually too successful in field operations.

g. Acoustic Emissions. As a solid material goes through plastic deformation or fracture, a certain amount of energy is released. Acoustic Emission (AE) is the measure of this energy. An acoustic emission monitoring system consists of a sensor, a preamplifier, filtering and signal conditioning modules and a signal recording system. Use of this system on a steel structure to detect cracking requires someone highly skilled in the application and interpretation of test results. Difficulties arise due to acoustic emission from sources other than fatigue cracks. These include such common items as welds, bolts, rivets, bearings, joints and railings. AE, when used properly, can only locate the general area of a structural defect, with other ND techniques required to pinpoint and quantify any cracks discovered. In addition, to detect a given crack, the area of the suspected crack requires sufficient loading to produce crack extension. Basically this equipment works by listening to crack growth under load.

h. Radiographic Inspection. Radiography involves the application of xrays to an area or specimen in question. Atenuation by the specimen, the ability to dilute or lessen in density the xrays that pass through, for example, a weld, indicates its relative homogeneity. Any discontinuity, such as a fatigue crack, will show up on film placed behind the specimen as less dense than the sound material. Orientation of the defect

substantially effects the ease of detection. Images of penetrameters on a radiograph determine the radiographic quality level or sensitivity obtained. They are placed on the same side of the specimen as the beam source. A qualified radiograph reader can then analyze the developed film and quantify any defects. Small fatigue cracks in material 1/4-inch or thicker are extremely difficult to detect. In general, fatigue cracks less than about 7/16-inch long in 1/4-inch thick material were missed about 50% of the time in some studies. The use of Radiographic Testing is primarily aimed at subsurface defects such as internal cracks, incomplete weld fusion, slag and other inclusions, incomplete weld penetration and gas pockets. Since the results of the test are interpreted from developed film, a permanent record is created. A high degree of skill and a good safety program are required when Radiographic Inspection is used.

i. Robotic Inspection. One or more companies are now marketing a system which uses high resolution video cameras on robotic arms attached to permanent falsework underneath the bridge. By remote telescanning, details can be visually monitored, with magnification if needed, without the inspector having to climb up to the detail each time the FCM is checked.

4-5.3 Concrete

In the previous sections we have been concerned with finding, identifying, and evaluating cracks in steel members. There is no problem about finding cracks in concrete members. The problem comes in evaluating the effect of the cracks. To do this we need to be able to evaluate the tensile elements (usually steel) inside the concrete. FHWA has sponsored research by the Southwest Research Institute which culminated in a report in April 1981 entitled "Detection of Flaws in Reinforcing Steel in Prestressed Concrete Bridge Members." This report investigated and rated 15 different methods for accomplishing this objective. These methods are acoustic emission, AD current, electrical resistance (concrete), electrical resistance (steel), electromagnetic nonlinear, electromagnetic reflection, electromagnetic time domain reflectometry, half-cell potential, holography, magnetic field, myospar, radiography, strain-gauge, thermal, and ultrasonic scattering.

This work lead to the development of a magnetic field inspection device which is pictured in Figure 90. As you can see, it is not the most portable system ever developed. According to reports, it is quite successful in evaluating the loss of section or fracture of reinforcing (either prestressed or mild steel) within six inches of the surface.

FIGURE 90
MAGNETIC FIELD INSPECTION DEVICE
for
FLAW DETECTION IN PRESTRESS CABLES

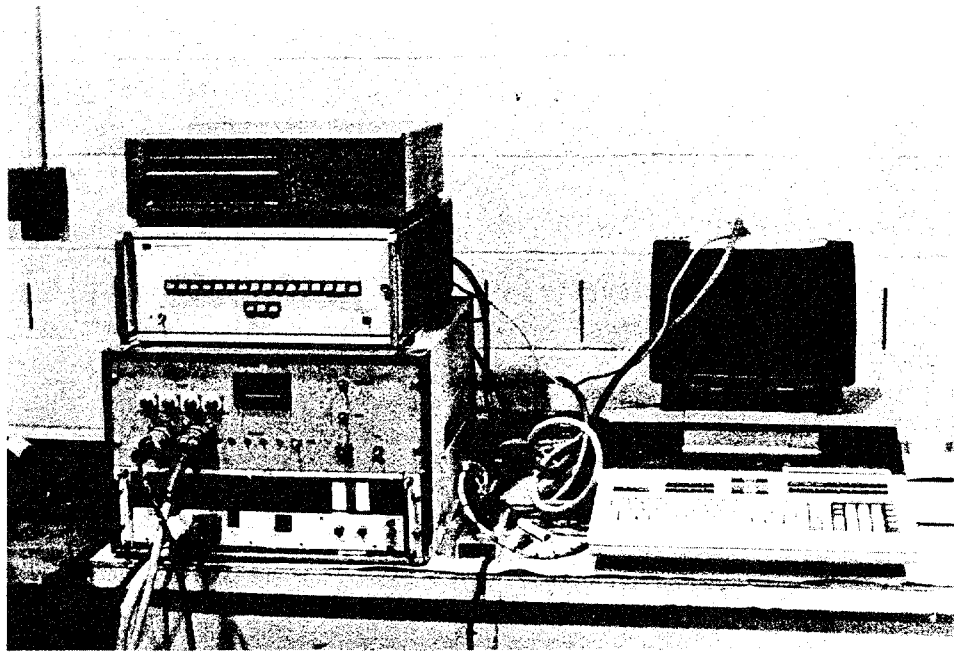

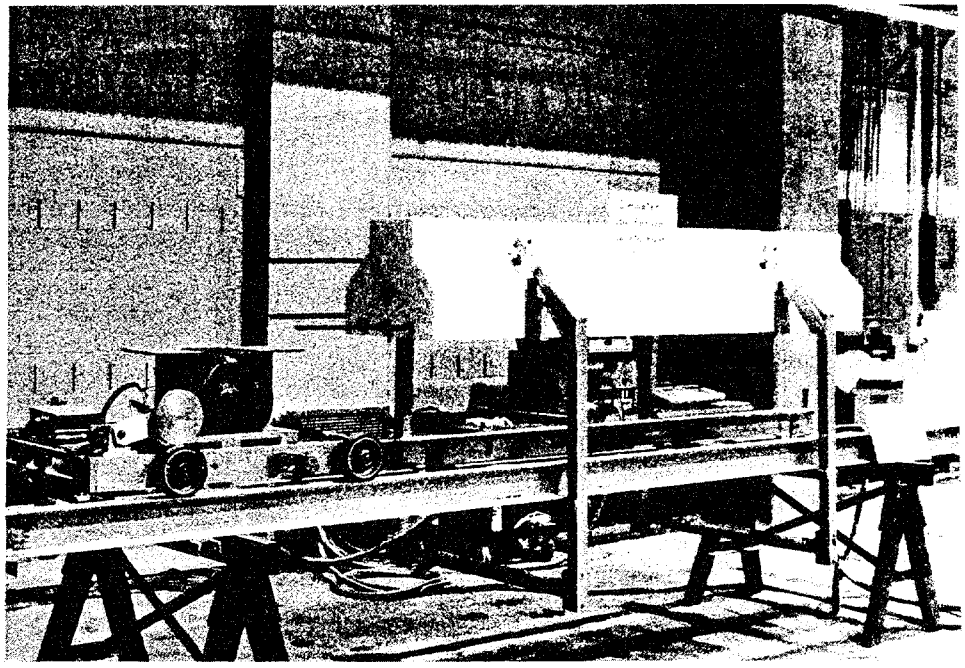

CHAPTER 5

THE INSPECTION REPORT

Section 1. REPORTS

5-1.1. General

Good reporting is the key to any successful inspection program. Before any repair tasks on the structure are undertaken, the Inspection Report should be reviewed to assess the impact on the structure. The important questions of what, where, why, when, and how must be answered. The goal of the Inspection Report is to provide a detailed verification of the inspection. The report must be comprehensive and should be developed with the thought that it may be used in a liability issue to substantiate the thoroughness of the inspection effort and the validity of the findings resulting from the inspection. The report provides a record of the present condition and a history of the structure's performance.

a. Condition. It is important to keep in mind that the consequences of problems on a bridge with fracture critical members may be very serious. The ability to go back to a bridge site and verify a defect or to correctly evaluate it in the office will depend on the proper recording and presentation of conditions found in the field. The safe load capacity can then be determined from such

conditions. The safety of the public is directly dependent on accurate recording of conditions found.

b. History. Well-documented reports, over many years, provide a history of the structure. The importance of this history may not be readily apparent. Many defects, however, become obvious as time passes. The movement of a pin laterally may not seem significant if isolated from one year to the next; but this movement, viewed over the course of ten years, may show a pattern indicating a problem which needs to be addressed.

5-1.2 Narrative

The narrative composes the bulk of the Inspection Report. The qualitative and quantitative information concerning the fracture critical member is found in the narrative. Photographs and sketches can become virtually useless without a solid narrative backup which provides insight about the condition. The condition reporting of fracture critical members therefore requires complete, clear and concise reporting including sketches and photographs as necessary. Additional care should be paid to conditions which currently might not be considered a deficiency or defect, but which may evolve into one in the future. With experience and training, the inspector should be able to identify these potential problem areas. The obvious defect is a problem waiting to be repaired. If these defects can be foreseen, then possibly the problem can be avoided altogether.

a. General. The inspection folder for a bridge containing fracture critical members should be identified by special markings, such as color, to call these bridges to the attention of the inspectors and other inspection personnel.

b. Identify Fracture Critical Members. The report needs to clearly identify all parts of the bridge that were given special attention due to their fracture critical characteristics. This helps the inspector by providing a list that can be reviewed to assure that nothing was missed and documentation that the bridge was inspected in a satisfactory manner. This report also helps future inspectors in identifying fracture critical members and details requiring inspection.

c. Inspection Procedure. The procedure used for inspection of the fracture critical member should be documented to the extent necessary to put findings in proper perspective. This should include methods used to access the FCM and what, if any, special inspection equipment or tools were used and/or will be required in the future.

d. Condition Description. The condition description should be the most important part of the narrative. It is used to evaluate the need for repairs, rehabilitation or even replacement of a given structure. It also plays a key role in determining the load capacity of the structure. Defects should be described in clear

and concise language. It is also important to give a complete description of FCMs when there are no notable problems. This documents that the member was inspected. It also can be used as a benchmark for comparison in the future. To avoid ambiguity, the same phraseology should be used when similar problems are encountered. As a minimum, three key pieces of information are needed to describe a problem.

(1) What. What is the defect encountered? A general comment describing the overall situation is desirable. Next, particular details should be addressed such as the extent of corrosion and depth, size of cracks, and the part of the member affected. Photographs should always be taken and/or sketches made of FCMs. These sketches and photographs should be referenced in the text.

(2) Where. Where is the defect occurring relative to a main point of support and relative to the centroid or centerline of the member affected? The location should be shown in a sketch to illustrate its relation to the ends of the member and its position in the cross section of the member.

(3) Why. Why has the defect occurred? The reason is important in terms of prevention. Sometimes the reason is obvious without detailed investigation. For example,

excessive corrosion might be found directly beneath a drainage pipe for the deck.

e. Summary and Conclusions. This section addresses the overall condition of the FCM and how individual defects affect the member as a whole. This portion of the report is important because a supervisor may only review this portion and expect to learn the critical details. Therefore, it is essential to be absolutely certain to place the proper weight on various defects or conditions found. Emphasis can also be placed on changing conditions from one inspection to the next. This is helpful in noting trends that may take a couple of years to develop and will be useful in predicting when necessary work, such as painting, may be required. A history of repair work should be maintained as a separate document or included in the report.

5-1.3 Sketches and Photographs

The old adage that a picture is worth a thousand words is typically borne out by the average Inspection Report. Oftentimes, a simple sketch or photograph explains a situation with a clarity that words cannot. This is not to say that sketches or photographs should serve as the main vehicle of communication. Rather, they should serve to supplement and enhance the narrative and bring out details and important aspects found during the inspection.

a. Sketches. Sketches need to clearly show in detail the extent and location of any defects found. They need to be drawn so that the problem being depicted can be readily grasped.

b. Photographs. Photographs serve to enhance and clarify an inspection report. A picture of any defect or problem area in a fracture critical member should always be taken. Additionally, pictures may also be taken which illustrate a lack of defects. A six-foot folding rule or similar object should be included in the photograph so that a person looking at the picture has an idea of the scale depicted. Sometimes several photographs of a member showing different views are also necessary. A photograph taken from a distance showing the overall picture is helpful and puts the closer-up details in perspective. Photographs of complicated defects or details are important, so that details that would not be clear in a more general picture, are clearly visible. Color photographs show details that might be lost in a black and white picture, such as the degree of corrosion. It should be noted, however, that black and white photographs reproduce better when photocopied.

5-1.4 Condition Rating

Structure Inventory and Appraisal (SI&A) sheets essentially summarize the results of bridge inspections in conformance with national guidelines. On the SI&A sheet, items 58 through 66 provide an indication of the

condition of various segments of the bridge with the use of a single digit code number. Item 59, Superstructure, is the only item which would reflect a condition found by a FCM inspection. These condition items serve very well as a means for the inspector to communicate his findings about the general condition of the various elements of a bridge. They also provide an excellent means of identifying trouble spots and are used to develop sufficiency ratings. They do not, however, provide information by themselves which can be used to establish the load carrying capacity of the structure. Detailed information from the FCM report must be used by engineers in the office to establish the operating and inventory ratings which are also included in the condition section of the SI&A sheet. The factors from the report which are considered when establishing the ratings are described in this section.

a. Absence of Cracks. In the complete absence of detectable cracks the condition rating for item 59 will be determined by other factors as described in the Bridge Inspectors Training Manual.

(1) Corrosion. Corrosion is probably the most common form of defect found on steel bridges. More section loss results from corrosion than from any other cause. Still, few bridge failures can be attributed solely to corrosion.

(a) Surface Corrosion. Corrosion not causing section loss that is measurable is usually referred to as surface corrosion. It is not serious and quite common when the

paint system has failed. Depending on the area covered, the minimum rating would be 6 or 7 with recommendations for sandblasting and painting.

(b) Measurable Section Loss. Corrosion significant enough to cause scaling and section loss will result in a loss of capacity in the member under consideration. This is particularly critical in purely tension members where the loss will be equally significant at any location on the cross-section of the member. Depending on the amount of loss and the final load rating of the member, the rating can vary considerably. The inspector, in conjunction with the bridge engineer, should use his best judgment in determining the effect on the condition rating.

(2) Nicks or Gouges. Nicks and gouges are locations of obvious section loss to the member. The effect of this loss will often need to be evaluated by the bridge engineer responsible for rating the structure. They many also be the source of fatigue cracking since they form an artifical crack in the member. If no fatigue cracking has occurred, they should be evaluated in a manner similar to section loss occurring to corrosion.

(3) Defective Welds. Defective welds are quite serious but usually will not be detected unless special testing is performed. If defective welds are detected visually, it will usually be because a crack has formed. Defective welds should be repaired immediately and should be rated no higher than 6, indicating a major item in need of repair. If fatigue cracking has occurred, a lower rating would be justified.

b. Presence of Cracks. In a fracture critical member, cracking is a very serious matter. The crack may continue to propagate until complete fracture of the member occurs. With failure of the member comes, by definition, collapse of the structure.

(1) Cracks Parallel to Primary Stress. These cracks are less serious than other cracks because they are parallel to the main direction of stress. Because of this, their ability to propagate is reduced. They are still very serious because they tend to turn perpendicular to the member. For this reason, generally a minimum rating of 4 is required to indicate that steps need to be taken immediately to keep the structure open.

(2) Cracks Perpendicular to Primary Stress. These cracks are very serious because all stresses applied across the member will work towards opening the crack further. Repair is required immediately. Because of the seriousness of a perpendicular

crack, a maximum rating of 3 should be assigned. During the inspection, the inspector must decide whether truck traffic must be removed from the structure immediately. In any case, the inspector must notify his supervisor and/or other authorities in regard to closing the bridge or restricting traffic.

Section 2. RECOMMENDATIONS

5-2.1 General

The recommendations are the final product of an Inspection Report. They are important because they direct the attention of the bridge engineer to the critical deficiencies and defects of the structure. In a large inspection program, many bridges will first be evaluated based on the recommendations made by the initial inspector.

5-2.2 Basis for Recommendations

Recommendations should be focused on maintaining fracture critical members in a condition that minimizes the risk associated with them. The optimum concern is the safety of the traveling public and protection of the public investment. Other bases for recommendations, however, should include maintaining fracture critical members in a condition that will not hamper proper inspection of critical details. The Bridge Inspectors' Training Manual covers in great detail other factors used as a basis for recom-

mendations. These include categories of repair, cost considerations, density of traffic, etc. All these factors play a role in determining what type of recommendations are appropriate for a given structure.

5-2.3 Making Recommendations for Fracture Critical Members

Fracture critical members, when deficiencies are found, generally require a high degree of priority for repair.

a. Summary. The summary must include a listing of all defects that affect a FCM. These include, but should not be limited to, the following: cracks; notches, nicks or gouges; defects in welds; or excessive corrosion.

b. Priorities. The defects listed for repair should be put in order of priority. For example, a crack in a flange is more significant than surface corrosion of the web.

(1) Urgent Repair. These are repairs that are urgently required in order to maintain the life of the structure. These repairs are for bridge-threatening defects.

(2) Programmed Repairs. These are repairs that will be worked into the normal maintenance schedule. This category of repair is for non-threatening deficiencies such as cleaning and painting of structural steel.

5-2.4 Processing Reports

Report processing for bridges with fracture critical members in need of remedial action or follow-up inspection should be accomplished as expeditiously as possible. The inspector who discovers a defect in a fracture critical member should report it immediately to his supervisor. The supervisor should act expeditiously based on his assessment of the deficiency. The degree of urgency will need to be indicated in a manner that will alert the various authorities involved about the importance of a particular task. These tasks can be very diversified, from load posting to special inspection with non-destructive testing equipment, to major rehabilitation, or even to closing the bridge to traffic. The priority reporting system may be one that is already existing in which fracture critical bridges are incorporated, or it may circumvent the usual existing system, depending on the degree of urgency, for one more streamlined, and allowing more rapid attention. This more streamlined approach might already exist for other bridges requiring prompt attention. Reports on fracture critical members should be transmitted in special colored or marked envelopes to indicate their criticality.

GLOSSARY

annotated bibliography	-	a list of reference articles or books with brief notes in regard to content
arc strikes	-	the scratch or mark by an inexperienced welder starting a weld
arches (tied)	-	an arch type in which the horizontal reactions at the support are supplied by a tension tie between supports
axial	-	in line with the centroid of the area
bending	-	the condition in a beam which receives loads perpendicular to its longitudinal axis
blow holes	-	void in a mold caused by heated air or steam escaping through the molten metal
bridge deficiency	-	a defect in a bridge or bridge member that makes the bridge less capable or less desirable for use
cantilever spans	-	see Bridge Inspectors Training Manual 70
capital investment	-	investment of money - cost of new bridge
collapse	-	geometric shape change rendering the structure unusable or unsafe
composite action	-	the bending action when the concrete deck is tied to beams or girder with shear connectors
contaminant	-	a salt or other element not normally present in the atmosphere which may react with the steel to produce corrosion
continuous spans	-	See Bridge Inspectors Training Manual 70
corrosion	-	product of the interaction of base metal (usually iron) with salts or other metals and an electrolyte - rust
crack initiation	-	the beginning of a crack usually at some submicroscopic defect
crack propagation	-	the growth of the crack due to energy supplied by repeated stress cycles
cross girders	-	girders supplying transverse support for longitudinal beams or girders which in turn support the roadway
cyclic stress	-	the variation in stress at a point from initial dead load value to the maximum additional live load value and hence back to dead load value with passage of live load
deformation	-	see Bridge Inspectors Training Manual 70
displacement induced stress	-	stresses caused by relative deflection of adjacent parts as the stresses in a diaphragm connecting beams with differing live load deflection
ductile fracture	-	a fracture characterized by plastic

elastic strain	-	elastic deformation, see Bridge Inspectors Training Manual 70
eyebar chain joint	-	see Figure 21
fatigue	-	see Bridge Inspectors Training Manual 70
fatigue crack	-	any crack caused by repeated cyclic loading
fatigue damage	-	member damage (crack formation) due to cyclic loading
fatigue life	-	the length of service of a member
framing	-	see Bridge Inspectors Training Manual 70
hands-on access	-	close enough to the member of component so that it can be touched with hands
horizontal cracks	-	cracks which are parallel to the longitudinal axis of the member and thus parallel to the primary stress
inclusion	-	an inclusion in the weld of slag or other inert material surrounded by weld metal and thus not visible
incomplete fusion	-	the weld metal has not combined metallurgically with the base metal
inspection frequency	-	the frequency with which the bridge is inspected - normally every 2 years
lamellar tear	-	incipient cracking between the layers of the base material (steel)
live load	-	see Bridge Inspectors Training Manual 70
load rating	-	an office exercise to determine the ability of a bridge to carry load based on the conditions reported by an inspection
negative bending	-	bending of a member such that tension is caused in the top of the member
out-of-plane bending	-	bending in a plane other than that of the web of the primary member, as with the floor beam attachment to a primary plate girder
oxidized metal	-	rust
pack rust	-	rust forming in a restricted place such as a truss joint that tends to "pack" itself into a tight fit as the oxide increases the thickness of the parts
pier caps (cross girders)	-	the upper part of a pier spanning between columns and receiving loads from longitudinal spans
pin and hanger assembly	-	see Figure 62
plastic deformation	-	deformation of material at constant stress, usually beyond the elastic range
programmed repair	-	those repairs that may be performed in an orderly program over the next 2 to 12 months
quality control	-	checks necessary to assure a uniform high level of quality, as in an inspection
redundancy	-	a structural condition where there are more elements of support than are necessary for stability

reentrant corner	-	see Bridge Inspectors Training Manual 70
resource requirement	-	money, manpower, time, and equipment
retrofit	-	the improvement or replacement of deflective parts to improve the capacity or utility of a bridge
rigid frames	-	see Bridge Inspectors Training Manual
scour	-	see Bridge Inspectors Training Manual
section loss	-	loss of cross sectional area usually by corrosion
shear forces	-	forces that cause primarily shear stress as opposed to bending stress
simple spans	-	see Bridge Inspectors Training Manual 70
stress	-	see Bridge Inspectors Training Manual 70
stress concentration	-	those concentrations of stress caused by lack of uniformity in section of the member as constructed
stress cycle	-	the variation in stress at a point from initial dead load value to the maximum additional live load value and hence back to dead load value with passage of live load
stress reversal	-	change of stress type from tension (+) to compression (-) or vice versa
stress riser	-	a detail which causes stress concentration
structural analysis	-	an analysis of a structure (bridge) to determine the interaction of members or member components and their consequent stresses
structural redundancy	-	that part of redundancy where the extra elements of support exist due to continuity in the framing elements
structural stability	-	the ability of a structure to be stable under existing and expected loads (by stable we mean in its normal configuration, not collapsed or tipped in any way)
surface corrosion	-	surface rust
surface lap suspended spans	-	those bridge spans suspended from cantilever arms
tack welds	-	small welds used for (temporary) connection as one uses a tack with paper or fabric
tensile	-	see Bridge Inspectors Training Manual 70
tensile strength	-	the maximum or ultimate unit stress which the material can withstand
tension components	-	components (parts) of a bridge or bridge member which are in tension
thermal movement	-	movement of a bridge structure due to increase and/or decrease in temperature
torsional	-	twisting perpendicular to the longitudinal axis of a member
traffic control	-	modification of normal traffic patterns by signs, cones, flagmen, etc.

transverse supports	-	floor beams, pier caps, cross girders, structural elements that support longitudinal load carrying members
truss	-	see Bridge Inspectors Training Manual 70
urgent repair	-	repairs that must be performed immediately or the bridge is in danger of collapse
vertical cracking	-	cracks which are perpendicular to the longitudinal axis of the member and consequently perpendicular to the primary stress
weld toe	-	particularly in a filet weld, the thin end of the taper furthest from the center of the weld in cross section

BIBLIOGRAPHY

TOPIC CODES

I - INSPECTION

E - EXAMPLES

FM - FRACTURE MECHANICS

S - STRUCTURAL

O - OTHER

TOPIC CODES		
O	1.	AASHTO, "Standard Specifications for Highway Bridges," AASHTO, Washington, D.C., 1984, 394 pp. Design specifications including definitions of FCMs.
FM	2.	AASHTO, "Guide Specifications for Fracture Critical Non-Redundant Steel Bridge Members." AASHTO, Wash., D.C., June 1978, 35 pp. Welding requirements, personel and testing are covered in detail.
I	3.	AASHTO, Manual for the Maintenance Inspection of Bridges 1970. AASHTO, Wash., D.C., 1970, 71 pp. Manual details bridge inspection, reporting, and rating procedures.
I	4.	AASHTO, Manual for the Maintenance Inspection of Bridges 1978. AASHTO, Wash., D.C., 1979, 75 pp. Manual updates previous bibliography citation.

TOPIC
CODES

S 5. Abeles, P. W.; Brown, E. I.; Morrow, J. W.; "Development & Distribution of Cracks in Rectangular Prestressed Beams During Statis & Fatigue Load." PCI Journal, Vol. 13, No. 5, October 1968, pp. 36-51.

Distribution of cracks is given.

FM 6. Alexander, W. G., "N.Y. State owned Steel Bridge Superstructure ranked by order of susceptibility to complete failure resulting from fatigue cracking and bridge fracture.", Unpublished, 1-24-84.

Redundancy and FC components are used to rank 27 types of bridges.

I 7. ASCE, "Inspection of Steel Bridges." Journal of the Structural Division, Vol. 97, No. STB, ASCE, NY, Aug. 1971, pp. 2107-2118.

Information on visual fatigue inspection is covered.

I 8. American Society for Nondestructive Testing, "Recommended Practice". ASNT Report No. SNT-TC-1A, Evanston, Ill, June 1975, 36 pp.

Discusses personnel qualification, certification in NDT, and recommended training courses.

I 9. Associate Administrators for Engineering and Operations, Memorandum to Regional FHWA Administrators, Direct Federal Program Administrator: Inspection and Maintenance of Major or Unusual Bridges, July 16, 1984.

The need for special instructions for in-service inspection of unique FC members is discussed.

TOPIC
CODES

I 10. Baldwin, J. W., Jr.; Salane, H. J.; and Duffield, R. C.; "Fatigue Cracks and their Detection." Erosion, Sedimentation, Flood Frequency, and Bridge Testing," TRR No. 832, TRB, Wash., DC, 1981, pp. 28-35.

Bridge was subjected to a stress range which was greater than design. A regular inspection program was maintained to monitor crack propagation.

FM 11. Barsom, J. M. "Fatigue Behavior of Weathering Steel Components." Second Bridge Engineering Conference Vol. 2, TRR 950, TRB, Wash., DC., 1984, pp. 1-9.

The data and discussion reveal that surface roughness of weathering steel corresponds to local stress raisers which may decrease the fatigue life. Consequently, the effect of weathering on fatigue life is more pronounced for category A detail.

S 12. Barsom, John M., "The Development of AASHTO Fracture-Toughness Requirements for Bridge Steels," American Iron and Steel Institute, Washington, D.C., February 1975.

Fracture mechanics is examined.

I 13. Barton, J. R.; Kusenberger, F. N.; and Birchak, J. R.; "Development of a New System for Detecting Fatigue Cracks in Steel Bridges." Report No. FHWA-RD-73-89, USDOT, Washington, DC, June 1973, 157 pp.

Study reports on the acoustic crack detector and the magnetic crack definer.

FM 14. Bellenoit, J. R.; Yen, B. T.; Fisher, J. W.; "Stresses in Hanger Plates of Suspended Bridge Girders." Second Bridge Engineering Conference, Vol. 2, TRR 950, TRB, Wash., DC, 1984, pp. 20-22.

Fatigue life of hanger plates was determined using finite-element model of stress distribution at the pin hole.

TOPIC
CODES

S 15. Bennett, E. W. and Joynes, H. W., "Fatigue Resistance of Reinforcement in Partially Prestressed Beams." PCI Journal, Vol. 22, No. 2, March-April 1977, pp. 78-88.

Tension reinforcement in fatigue critical. Design changes recommended.

I 16. "Computerized System Measures and Interprets Bridge Structure Motion," Better Roads, Vol. 53, No. 11, Nov. 1983, 34 pp.

New Motion Measuring System is described.

FM 17. Crosley, P. B., "Fort Duquesne Bridge: Fracture Analysis of Flange Cases," FHWA/TS/84/210, Federal Highway Administration, Washington, D.C., December 1984.

Example of fatigue fracture is studied.

S 18. Csagoly, P. F. and Jaeger, L. G., "Multi-Load-Path Structures for Highway Bridges." Probability Design, Redundancy, and Other Bridge Papers, TRR 711, TRB, Wash., DC, 1979, pp. 34-40.

Causes of collapse and the Ontario Code are discussed.

I 19. "Fallen Bridge was Rated near Perfect," The Journal Gazette, Fort Wayne, Indiana, Jan 18, 1983.

Culvert with near perfect rating collapsed highlighting need for better inspection.

I 20. Federal Highway Administration, Bridge Inspector's Training Manual 70. USDOT, Wash., DC, 1969, 182 pp.

Manual outlines the FHWA guidelines for the instruction and conduct of bridges inspectors.

TOPIC
CODES

O 21. Federal Highway Administration, "Fifth Annual Report to Congress, Highway Bridge Replacement and Rehabilitation Program." USDOT, Wash., DC, May 1984, 54 pp.

Report describes progress made in administrating the HBRRP. Report also discusses the status of bridge inventories.

I 22. Fisher, J. W.; Hausammann, H.; Sullivan, M. D.; Pense, A. W.; "Detection and Repair of Fatigue Damage in Welded Highway Bridges" NCHRP Report No. 206, TRB, WAsh., DC, 1979, 85 pp.

Detection of cracks and evaluation of repair techniques are discussed.

I 23. Fisher, J. W., "Inspecting Steel Bridges for Fatigue Damage." FHWA Report No. 72-3 FHWA/PA-81/005, USDOT, Wash., DC, March 1981, 82 pp.

Handbook gives guidance where to look for cracks and what to look for.

FM E 24. Fisher, J. W., Fatigue and Fracture in Steel Bridges-Case Studies. John Wiley and Sons, NY, 1984, 310 pp.

Book studies 22 cases of bridges which have experienced crack growth.

FM 25. Fisher, J. W.; Pense, A. W.; Slockbower, R.E., and Hausammann, H., "Retrofitting Fatigue Damaged Bridges." Bridge Engineering, Vol. 1, TRR 164, TRB, Wash., DC, 1978, pp. 102-109.

This paper examines laboratory and field studies on ways to retrofit fatigue damaged members. Drilling holes at crack tips, peening and remelting the weld toe are investigated.

FM 26. Fisher, J. W., Et. Al, "Effects of Weldment of the Fatigue Strengths of Steel Beams," NCHRP Report No. 102, TRB, Washington, D.C., 1970, 114 pp.

Fatigue aspects of various structural details are investigated.

TOPIC
CODES

FM 27. Fisher, J. W., Et. Al.; "Fatigue Strength of Steel Beams with Welded Stiffeners and Attachments," NCHRP Report No. 147, TRB, Washington, D.C., 1974, 85 pp.

Fatigue characteristics of various structural details are investigated.

S 28. Fisher, J. W, "Guide to 1974 AASHTO Fatigue Specifications," AISC, NY, 1974, 26 pp.

Paper introduces modern fatigue design to engineers.

E 29. Fisher, J. W.; Pense, A. W.; and Roberts, R., "Investigation and Analysis of the Fractured Girder in Bridge No. 9800 Over the Mississippi River in St. Paul, Minn.," MinnDOH, October 1975, 22 pp.

Case of fatigue fracture is studied.

E 30. Fisher, J. W., Et. Al., "Long Time Observation of Fatigue Damaged Bridge," Journal of the Technical Council, ASCE, Vol. 107, Proc. Paper 16166, April 1981, pp. 55-71.

Case of fatigue fracture is studied.

E 31. Fisher, J. W. Et. Al., "Quannipiac River Bridge Cracking," Journal of the Structure Division, ASCE, Vol. 106, No. St4, Proc. Paper 15343, April 1980, pp. 773-789.

E 32. Fisher, J. W., Et. Al., "Final Report on I-79 Tied Arch Cracking-Neville Island Bridge," Report No. FHWA/PA-84-016, Pennsylvania DOT, Harrisburg, PA 17120, 82 pp.

Detailed study of cracking in tie of tied arch.

E 33. Galambos, C. F., "Bridge Safety." Public Roads, Vol. 48, No. 2, Sept. 1984, pp. 41-47.

Five famous failures are discussed.

TOPIC
CODES

I 34. Garren, John H., "Steel Bridge Inspection," FHWA Publication, USDOT, Washington, D.C., October 1973, 10 pp.

FCM inspection is mentioned.

FM 35. Grover, H. J.; Gordon, S. A.; and Jackson, L. R., Fatigue of Metals and Structures, Department of the Navy, Washington, D.C., 1954, 394 pp.

Fatigue is discussed.

E 36. Hanson, J. M., "Bridge Failures - Aftermath and Investigation." TRNEWS. No. 112. May - June 1984, pp. 7-11.

Investigations of structural failures are discussed.

S 37. Hanson, J. M. and Hulsbos, C. L., "Fatigue Tests of Two Prestressed Concrete I-Beams with Inclined Cracks." Bridges and Structures, HRR No. 103, HRB, Washington, D.C., pp. 14-31.

Cracks in prestressed concrete beams due to overload did not cause fatigue failure under design loads.

38. Hanson, J. M. and Hulsbos, "Shear Fatigue Tests of Prestressed Concrete I-Beams with Web Reinforcement." Fritz Engineering Lab Report No. 223.29, January 1969, 111 pp.

Report concludes that PSC I-Beams have a remarkable shear fatigue resistance.

FM 39. Herr, L. A., "Reducing the risk of Catastrophic Bridge Failures." Bridge Engineering, Vol. 2, TRR 665, TRB, Wash., DC, 1978, pp. 255-257.

Paper presents a philosophy and describes models for reducing the risk of catastrophic bridge failures.

TOPIC
CODES

I 40. Hopwood, T. and Havens, J. H., "Acoustic Emissions and Fatigue Characteristics of Typical Bridge Steels", Bridge Engineering, Vol. 1, TRR 664, TRB, Wash., DC, 1978, pp. 129-135.

Acoustic emission monitoring was used during tensile tests and axial-fatigue tests to determine physical characteristics of acoustic emission phenomena.

S 41. Hopwood, T. and Havens, J. H., "Introduction to Cable Suspension Bridges." Kentucky Transportation Research Program, University of Kentucky, Lexington, Kentucky, 1984, 37 pp.

General overview of suspension bridges including history.

I 42. Hopwood, T. and Havens, J. W., "Corrosion of Cable Suspension Bridges." Kentucky Transportation Research Program, University of Kentucky, Lexington, Kentucky, 1984, 70 pp.

Discussion of corrosion problems in cables of suspension bridges including inspection of several Kentucky suspension bridges.

I 43. Hopwood, T. and Havens, J. H. "Inspection, Prevention, and Remedy of Suspension Bridge Cable Corrosion Problems." Kentucky Transportation Research Program, University of Kentucky, Lexington, Kentucky, 1984, 30 pp.

Methods for visual inspection and recommendations for remedial work on cable suspension bridges.

O 44. Kansas DOT, "Kansas DOT Saves Its Bridges and $1 Million Besides." TRNEWS, January-February 1983, pp. 9-10.

Kansas reinforces shear cracks by drilling holes from top and grouting in rebar.

FM 45. Keating, P. B.; Fisher, J. W.; Yen, B. T.; and Frank, W. J.; "Fatigue Behavior of Welded Wrought-Iron Bridge Hangers." Second Bridge Engineering Conference, Vol. 2, TRR 950, TRB, Wash., DC, 1984, pp. 113-120.

Cracks in wrought-iron hangers at lap splices are examined. Because of low live load, no imminent problem is expected.

TOPIC
CODES

FM 46. Koob, M. J.,; Hanson, J. M.; and Fisher, J. W.; "Post - Construction Evaluation of the Fremont Bridge." Second Bridge Engineering Conference, Vol. 2, TRR 950, TRB, Wash., DC, 1984, pp. 131-140.

A comprehensive post-construction evaluation was made of the Fremont Bridge to assess FC Members.

I 47. Kusenberger, F. N., and Barton, J. R., "Detection of Flaws in Reinforcing Steel in Prestressed Concrete Bridge Members." Report No. FHWA-RD-81-087, USDOT, Washington, D.C., April 1981, 147 pp.

Report assessed fifteen non-destructive test which detect reinforcing steel deterioration in prestressed concrete structures in situ.

I 48. Lamble, J. H., Principal & Practice of Non-Destructive Testing. Wiley & Sons, NY, 1963, 237 pp.

Information on 50 NDT methods are discussed.

I 49. Leone A., McGogney C. H., Barton J. R., "A New System for Inspecting Steel Bridges for Fatigue Cracks." Public Roads, Vol.37, No. 8, March 1974, pp. 205-293.

The acoustic crack detector and the magnetic crack definer are detailed.

I 50. Louisiana DOT and Development, "Bridges Inspector Training Course." Louisiana DOT and Development, Baton Rouge, 1980.

Inspection procedures for cracks in steel is outlined.

FM 51. Maeda, Y., "Fatigue Cracks of Deep Thin-Walled Plate Girders." Bridge Engineering, Vol. 1, TRR 664, TRB, Wash., DC, 1978, pp. 120-128.

Three types of cracking of structural steel are studied. The mechanism of cracking is discussed from the point of fracture mechanics.

TOPIC
CODES

I 52. Miller, J. W., Memorandum to John Hibbs: Inspection and Maintenance of Major or Unusual Bridges with Fracture Critical Members, August 31, 1984.

IDOT's method of inspection of pin & hanger assemblies is detailed in an attachment.

O 53. "National Bridge Inspection Standard." United States Congress, Subpart C of Federal-Aid Highway Act of 1968.

Bridge inspection is mandated by law.

E 54. National Transportation Safety Board, "Highway Accident Report, Collapse of U.S. 35 Bridge, Point Pleasant, West Virginia, December 1970."

Cause of collapse is identified.

E 55. National Transportation Safety Board, "Highway Accident Report, Collapse of a Suspended Span of Interstate Route 95 Highway Bridge over the Mianus River, Greenwich, Connecticut, June 28, 1983." NTSB, Wash., DC, July 19, 1984, 111 pp.

The probable cause for the collapse of the Mianus River Bridge is identified.

I 56. Organization for Economic Cooperation and Development, Bridge Inspection. OECD, Paris, 1976, 133 pp.

An inspection program is outlined for the European Community.

S 57. "Ontario Highway Bridge Design Code." Ministry of Transportation and Communications, Ontario, January 1979.

I 58. Olympus Corporation, Lake Success, N.Y. 11042 "Inspecting Structures with Borescopes and Fiberscopes."

Promotional literature on borescopes.

TOPIC
CODES

FM 59. Out, J. M. M.; Fisher, J. W.; and Yen, B. T.; "Fatigue Strengthening of Weathered & Deteriorated Riveted Members." Second Bridge Engineering Conference, Vol. 2, TRR 950, TRB, Wash., DC, 1984, pp. 10-19.

Tests were run on 80-year-old riveted girders. Tests confirmed redundancy of riveted sections fabricated from mild steel.

I 60. Park, S. H., Bridge Inspection and Structural Analysis, Handbook of Bridge Inspection, S. H. Park, Trenton, NJ, 1980, 312 pp.

Aspects of inspection and analysis procedures are detailed.

FM 61. Park, S. H., Bridge Rehabilitation and Replacement (Bridge Repair Practices). S. H. Park, Trenton, NJ, 1984, 818 pp.

Book discusses causes of defects and deterioration along with repairs, rehabs, retrofits, and replacement.

I 62. Peters, V. A., "Underwater Inspection." Recent Developments in NDT, The Welding Institute, Cambridge, UK, 1978, pp. 81-84.

Discusses underwater test methods.

S 63. Podolny, Walter Jr., "The Cause of Cracking in Post-Tensioned Concrete Box Girder Bridges and Retrofit Procedures." PCI Journal, March-April 1985, pp. 82-139.

I 64. Prine, D. W., et. al. "Improved Fabrication and Inspection of Welded Connections in Bridge Structures." FHWA/RD-83/006, USDOT, Wash., DC, Nov. 1982, 307 pp.

Report describes the optimization of acoustic emissions monitoring.

TOPIC
CODES

FM 65. Rabbat, B. G. and Hanson, N. W.; "Fatigue Tests of Bolted Connections Designed by Shear-Friction." Bridge Engineering, Vol. 1, TRR 664, TRB, Wash., DC, 1978, pp. 145-152.

Tests were run on 16 slab-to-girder bolted connection speciments taken from precast deck. Control variables included use of concrete or steel girders, bolt size, and grout between the deck and girder.

I 66. Reed, R. E., Jr. and Cole, H. A., Jr., "Randomdec: Mathematical Background and Application to Detection of Structural Deterioration in Bridges." Report No. FHWA-RD-76-181, USDOT, Wash., DC, Sept. 1976, 180 pp.

The application of randomdec analysis to the detection of flaws is investigated. Project included field and lab tests.

FM 67. Reilly, R. J., "Centuries Later, Bridge Research Continues to Pay Off." TR NEWS, No. 106, May - June 1983.

Details bridge history and Fisher's work.

FM 68. Roberts, R., Et. Al., "Determination of Tolerable Flaw Size in Full Size Welded Bridge Details." Report No. FHWA-RD-77-170, USDOT, Wash., DC, Dec. 1977, 427 pp.

Lab tests were conducted on full sized welded beams. Tests confirm the necessary of an adequate fatigue design in any fracture control plan.

FM 69. Roberts, R.; Barson, J. M.; Rolfe, S. T.; and Fisher, J. W.; "Fracture Mechanics for Bridge Design." FHWA Report No. FHWA-RD-78-68, USDOT, Wash., DC, July 1977, 213 pp.

Course text detailing fracture mechanics design of bridges.

FM 70. Roberts, R.; Barson, J. M.; Rolfe, S. T.; and Fisher, J. W.; "Student Workbook - Fracture Mechanics for Bridge Design." FHWA Report No. FHWA-RD-78-69, USDOT, Wash., DC, July 1977, 213 pp.

Workbook is companion to the previous bibliography citation.

TOPIC
CODES

O 71. Sabnis, G. M., "Innovative Methods of Upgrading Structurally and Geometrically Deficient Through Truss Bridges." FHWA Report No. FHWA/RP-82/041, USDOT, Wash., DC, April 1983, 130 pp.

Methods of rehabilitating trusses are formulated.

I 72. Salane, H. J.; Baldwin, J. W.; and Duffield, R. C.; "Dynamics Approach for Monitoring Bridge Deterioration." Erosion, Sedimentation, Flood, Frequency, and Bridge Testing, TRR No. 832, TRB, Wash., DC, 1981, pp. 21-28.

Stiffness and vibration signatures are used to monitor fatigue damage in a bridge.

FM 73. Sanders, W. W., Jr.; Elleby, H. A.; and Klaiber, F. W.; "Ultimate Load Behavior of Full-Scale Highway Truss Bridges." Report No. FHWA-RD-76-40, USDOT, Wash., DC, September 1975, 101 pp.

An old, pin-connected truss was tested under ultimate load, service loads, and other test programs. Comparisons between experimental and analytical results are made.

FM 74. Self, M. W., "Laboratory Static Load Tests on Five Sunshine Skyway Bridge Girders." Evaluating Bridge Structures, Pavement Management, Roadside Management, Deicing Salts, Transportation of Hazardous Material, TRR No. 647, TRB Washington, D.C., 1977, pp. 1-5.

Tests indicate that excessive spalling causes no serious loss of strength.

E 75. "Sewickley Bridge Allegheny County, Pennsylvania," USS Bridge Report, United States Steel, Pittsburgh, PA, September 1982, pp. 16.

Discussion of special design aspects including FCMs.

TOPIC
CODES

S 76. Stratfull, R. F., "Corrosion Autopsy of a Structurally Unsound Bridge Deck." Corrosion, Concrete, and Quality Control, HRR 433, HRB, Wash., DC, 1973, pp. 1-11.

Condition of deteriorated bridge deck is explained.

S 77. Sweeney, R. A. P., "Importance of Redundancy in Bridge - Fracture Control." Probabilistic Design, Redundancy, and other Bridge Papers, TRR 711, TRB, Wash., DC, 1979, pp. 23-30.

Advantages of rivets, bolts, and structural and member redundancy were examined.

78. Sunbury, R. D.; Jonas, P. G., Et Al, "Design and Construction of Welded Bridge Members and Connections," FHWA PUblication, USDOT, Washington, D.C., September 1980, pp 25-27.

Proper fatigue design is explained.

FM 79. Tilly, G. P., "Fatigue Problems in Highway Bridges." Bridge Engineering, Vol. 1, TRR 664, TRB, Wash., DC, 1978, pp. 93-101.

Several factors which influence fatigue were investigated. The factors included: Surfacing, residual stress, plate thickness cyclic frequency, and rest period.

☆ U.S. GOVERNMENT PRINTING OFFICE:1996-405-573/20066