Roadside Safety Research with the Iowa Department of Transportation

Bob Bielenberg
Research Engineer
Midwest Roadside Safety Facility
University of Nebraska

rbielenberg2@unl.edu

http://mwrsf.unl.edu/

2022 Mid-Continent Transportation Research Symposium

Ames, IA

Sept. 15, 2022

IaDOT Roadside Safety Research

- Roadway departures are a major factor in fatalities ➔ approximately ½ of fatalities
- Iowa DOT active in roadside safety research

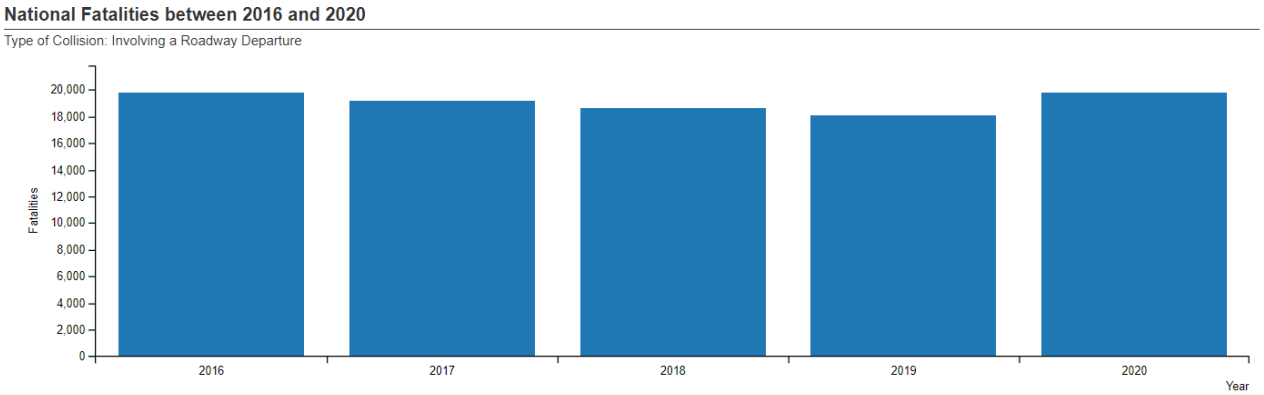

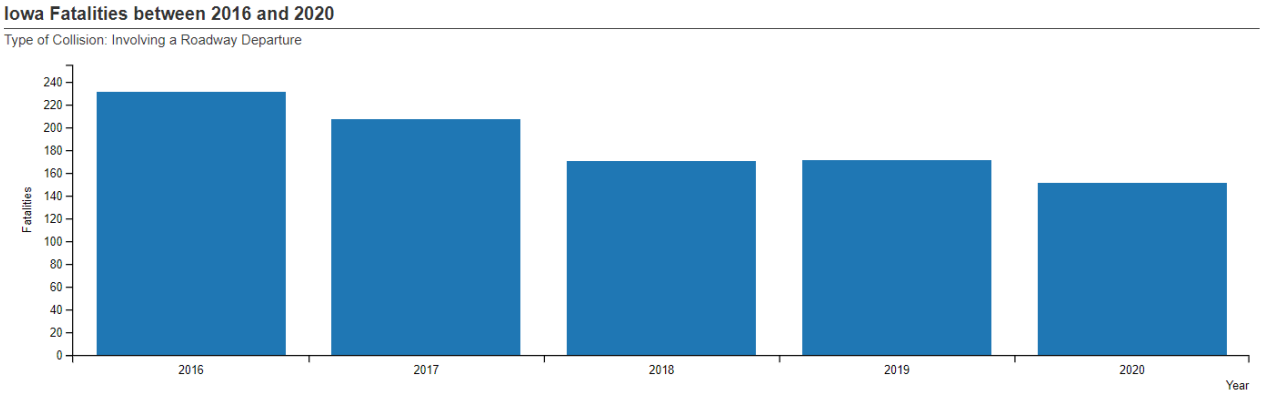

Combination Bicycle Railing

- Existing IaDOT design
- Develop MASH TL-2 low-height, vertical-face traffic barrier with attached bicycle railing
  - Determine minimum TL-2 vertical parapet height
  - Combination rail must meet AASHTO LRFD guidance
    - 42” above sidewalk
    - ZOI concern

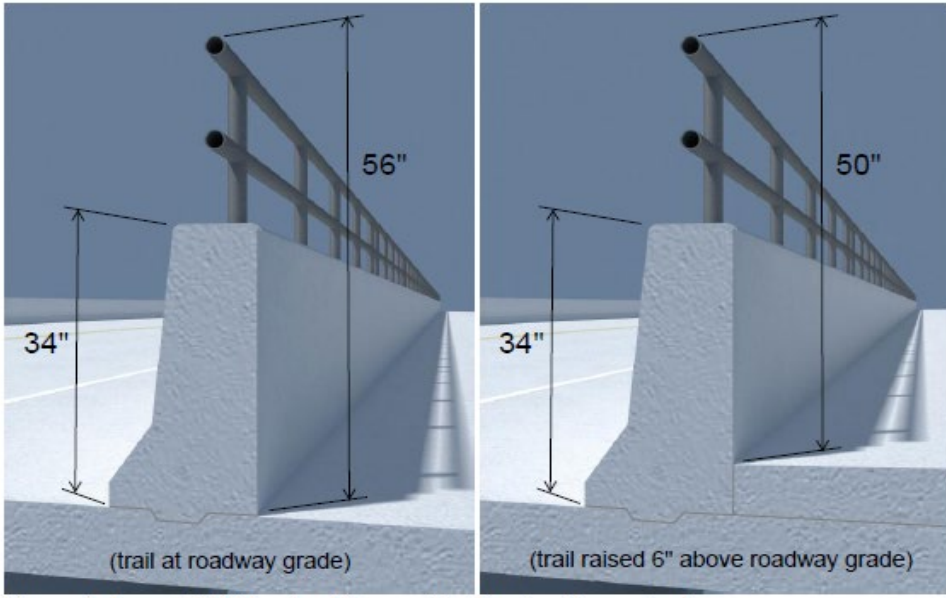

Figure 1: Iowa DOT Standard Separation Barrier (in service)

Minimum TL-2 Parapet Height

- Combination of simulation and previous crashing utilized
- Selected 24 in. tall parapet for design and testing

(IA) Combination Bicycle Railing

- Top-mounted posts
  - Offset to reduce vehicle interaction
- Single horizontal rail
- 48-in. total height for all installations
  - 24-in. tall parapet and 24-in. tall bicycle rail
- Welded, pre-fabricated rail and post sections
  - 20-ft long

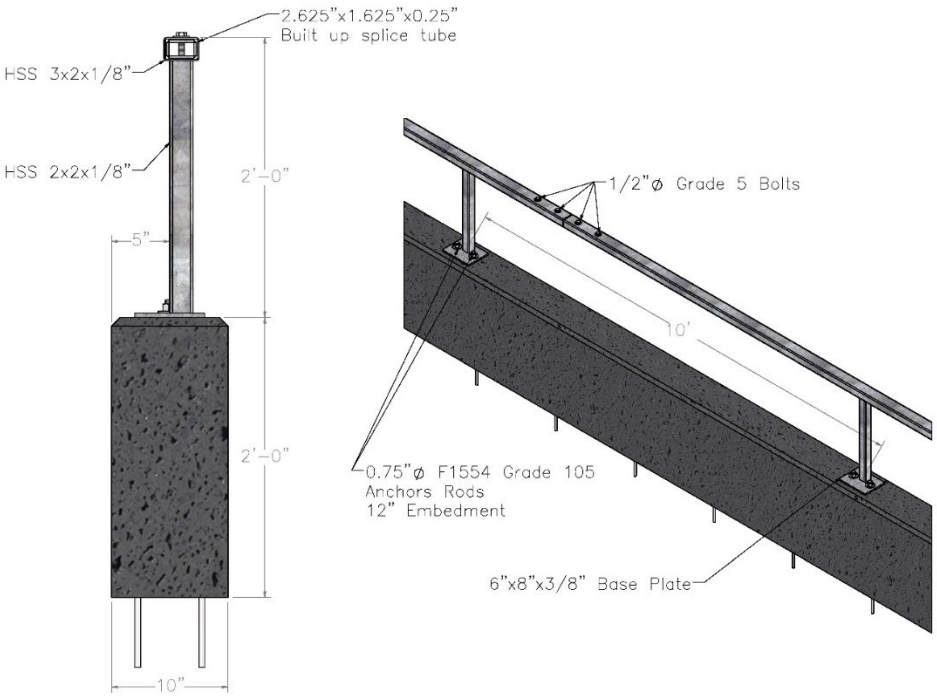

Simulation of Proposed Design

- Selected CIP to maximize potential for vehicle snag
- Similar snag observed to be acceptable in previous testing of MASH TL-3 parapet mounted signs

Simulation Run Impact Point	Vehicle Extent Beyond Face of Parapet at Post Impact
4.3 ft US of post	8.43 in.
3.8 ft US of post	8.52 in.
3.3 ft US of post	7.47 in.
1.7 ft US of post	3.60 in.

Test No. IBBR-1

Test no. 2-11 ➔ 2270P, 44 mph and 25 degrees

Test No. IBBR-1

- Test met all MASH TL-2 criteria
  - 24 in. parapet redirected without assistance of pedestrian rail

Optimized MASH TL-4 Bridge Rail

- Existing NCHRP Report 350 TL-4 bridge rails
  - 32” height
  - 54-70 kip capacity
  - NJ and F-shape vehicle stability issues (roll and climb)
- MASH TL-4
  - Increased rail height
    - 36” minimum height (vehicle override)
  - Increased impact loads
    - 50% increase in impact severity

Optimized MASH TL-4 Bridge Rail

- Objective
  - Develop an optimized, concrete bridge rail to MASH TL-4
- Optimize for performance and cost
- Compatible with future 3-in. roadway overlay
- 5-ft deck overhang

General Barrier Geometry

- 39” Tall
  - 36” to satisfy MASH TL-4
  - 3” future overlay
- Single Slope Front Face
  - Vehicle stability
  - Near vertical 1:19.5
- Vertical Back
  - Sloped back acceptable
  - Reduced width more critical
- Top Barrier Width
  - 8” minimum for rebar bends

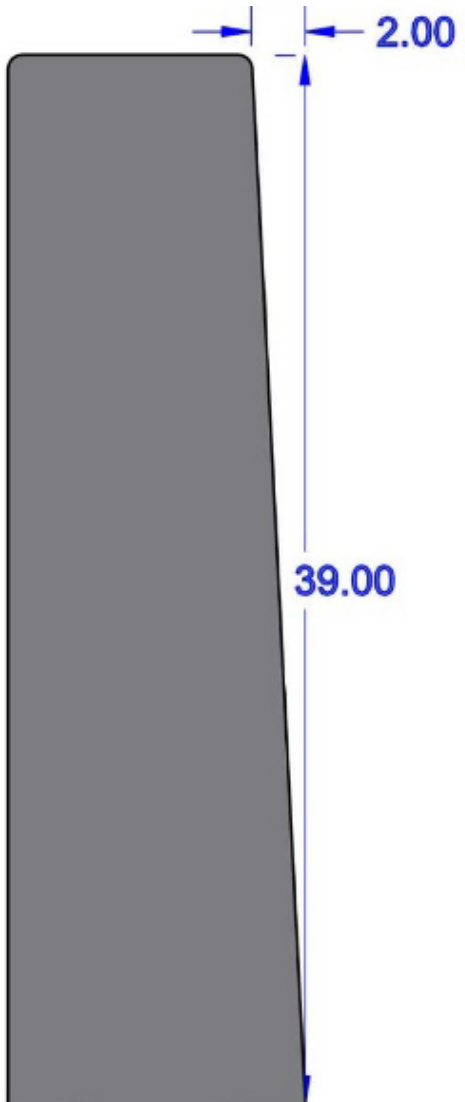

Bridge Rail Optimization

- Satisfy design loads – NCHRP 22-20(2)
  - Yield Line Theory
  - 80-kip lateral load applied over 5 ft
- Design variables
  - Barrier width
  - Longitudinal bar size and quantity
  - Stirrup size and spacing
- Optimize based on strength, cost, weight, and deck loading
- Deck design

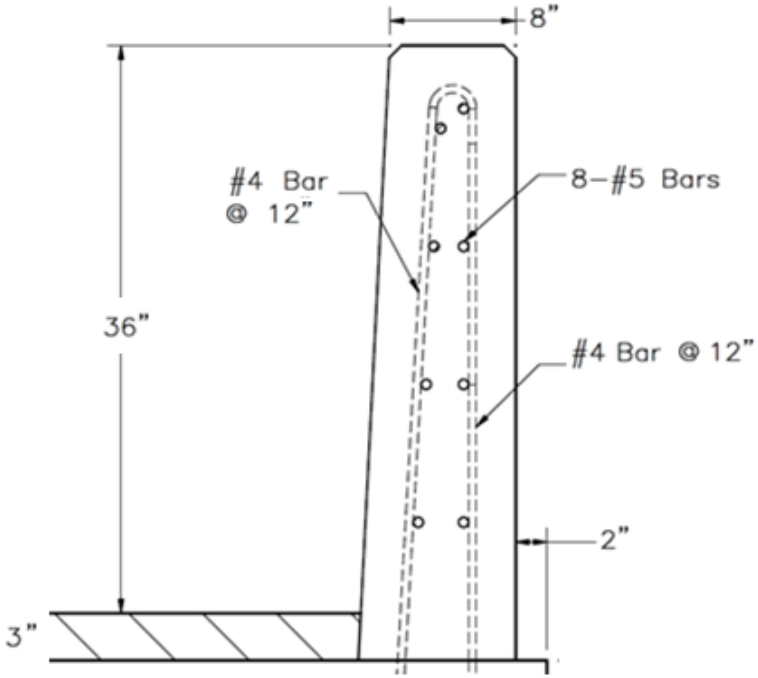

Test Installation

- 150-ft long barrier
- 75-ft simulated bridge deck
  - 5-ft overhang
  - 3” overlay

Test 4CBR-1 (MASH 4-12)

Optimized MASH TL-4 Bridge Rail

- Satisfied all criteria for MASH 4-12
  - Minor cracking of rail
  - No visible damage to deck
- MASH passenger vehicle tests (4-10 and 4-11) deemed non-critical
  - Near-vertical shape ➔ vehicle stability
  - Previous MASH 1100C and 2270P impacts into single-slope and vertical shaped barriers
- Bridge rail considered MASH TL-4 crashworthy

TL-4 Open Concrete Rail

- Development of a MASH TL-4 open concrete bridge rail
  - Optimize opening for aesthetics, drainage, and snag potential
  - Limit deck damage
  - Accommodate pavement overlays

Bridge Rail Design

- 39” height
  - 36” for TL-4 + 3” future overlay
- Beam
  - (8) #6 longitudinal bars
  - #4 stirrups @ 12”
- Post
  - 36” long, 10” wide, 12” tall
  - 4” post setback
  - 2” offset from deck edge
  - (12) #5 vertical bars
- 9 ft post spacing
  - 6 ft openings

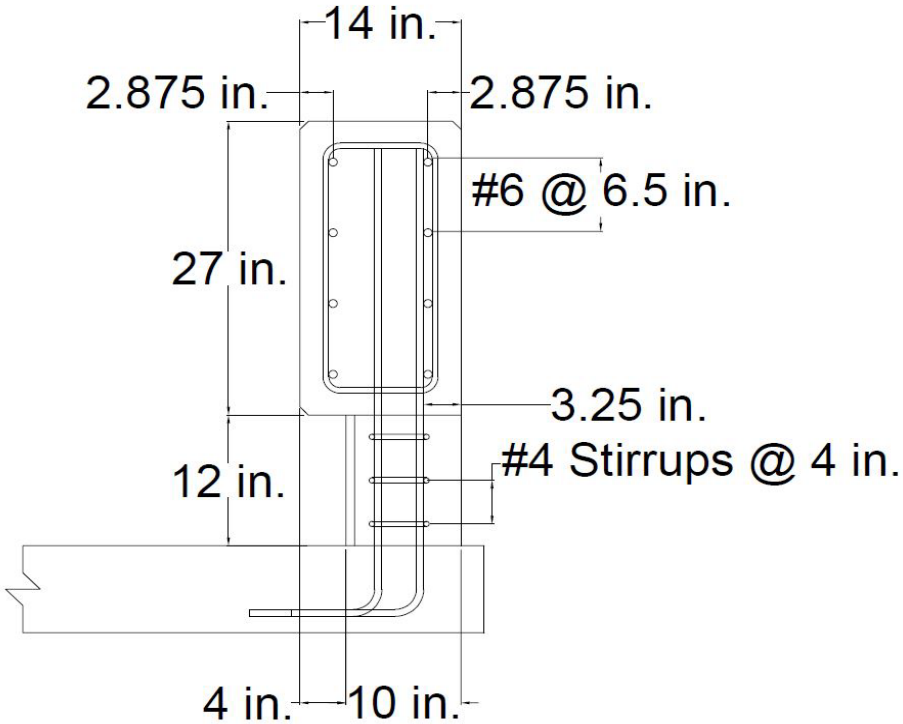

2270P and 1100C Testing

10000S Test

MGS Adjacent to Slope

- Guidance and recommendations for Midwest Guardrail System installed adjacent to fill slopes
  - Level terrain to 1V:2H
  - Barrier offsets between 2 ft in front of the slope breakpoint to beyond the slope breakpoint

Existing MGS on Slope Tests

9’ long posts at SBP

6’ long posts at SBP

Recommended MASH TL-3 MGS Configurations Adjacent to Slope						
Fill Slope	Post Offset from Slope [1,2] (ft)	Post Type	Post Length, L (ft)	Post Spacing (in.)	Blockout Depth (in.)	Working Width (in.)
1V:2H	0 (at SBP[3])	W6x8.5 or W6x9	$6 \leq L \leq 9$	75	0 - 12	See Figure 1
		6-in. x 8-in. Southern Yellow Pine (SYP)	$6 \leq L \leq 7.5$	75	8 - 12	See Figure 1
≤ 1V:2H	0 (at SBP[3])	W6x8.5 or W6x9	6	75	0 - 12	See Figure 2
		6-in. x 8-in. Southern Yellow Pine (SYP)	6	75	8 - 12	See Figure 2
≤ 1V:2H	0 < Offset < 2	W6x8.5 or W6x9	6	75	0 - 12	See Figure 2 and Figure 3
		6-in. x 8-in. Southern Yellow Pine (SYP)	6	75	8 - 12	See Figure 2 and Figure 3
1V:2H	-1.25 (down slope)	W6x8.5 or W6x9	8	75	8 - 12	55.2

1 – Slope offset is measured from slope break point to center of post
2 – Slope offset is positive (+) in front of the slope break point and negative (-) down the slope
3 – SBP = Slope Break Point

Dynamic Deflection and Working Width

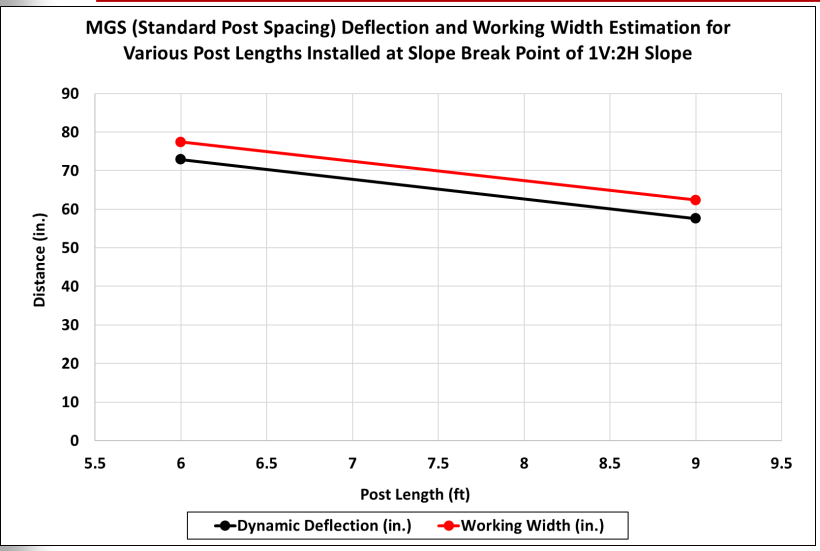

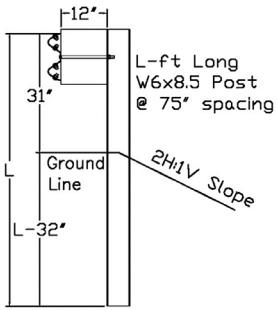

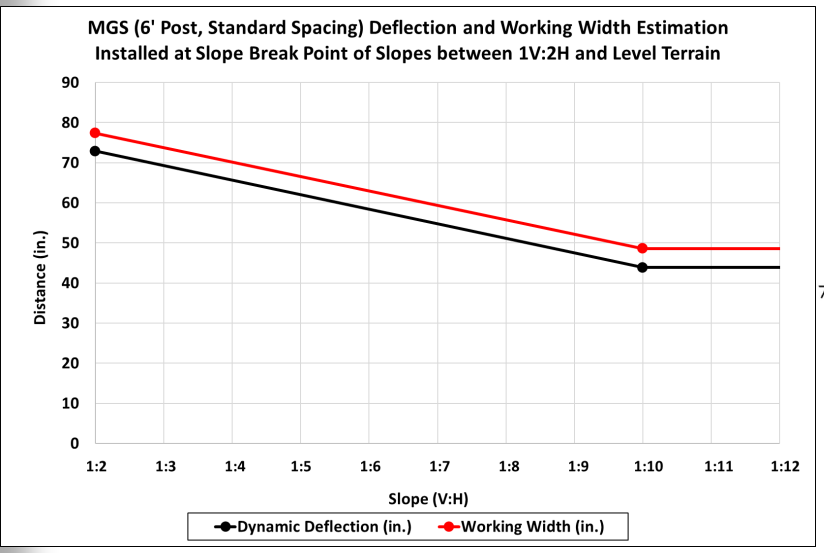

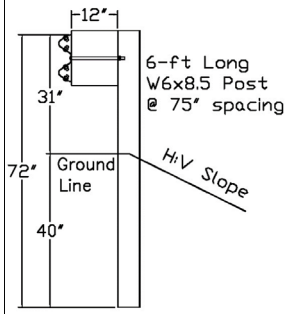

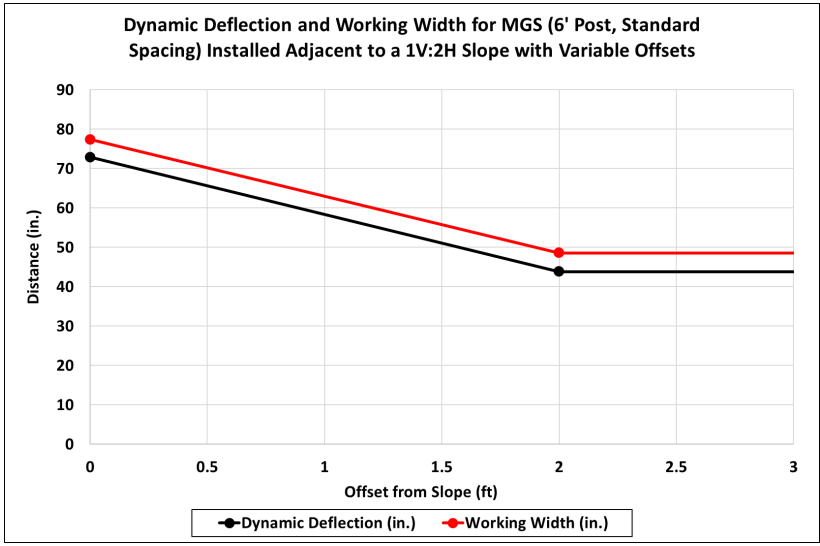

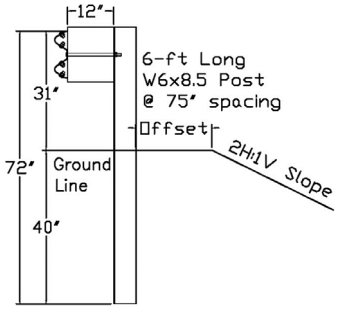

Acknowledgements

- Iowa DOT
- Midwest Pooled Fund Program