MASH Evaluation of Roadside Hardware

Bob Bielenberg
Research Engineer
Midwest Roadside Safety Facility
University of Nebraska

rbielenberg2@unl.edu

http://mwrsf.unl.edu/

2022 Mid-Continent Transportation Research Symposium

Ames, IA

Sept. 15, 2022

What is MASH?

- AASHTO's Manual for Assessing Safety Hardware (MASH)
- Standardized criteria for crash testing and evaluation of roadside safety hardware
  - Test vehicles and impact conditions
  - Documentation and data analysis
  - Hardware evaluation criteria
- Focus on repeatability and occupant safety/survivability

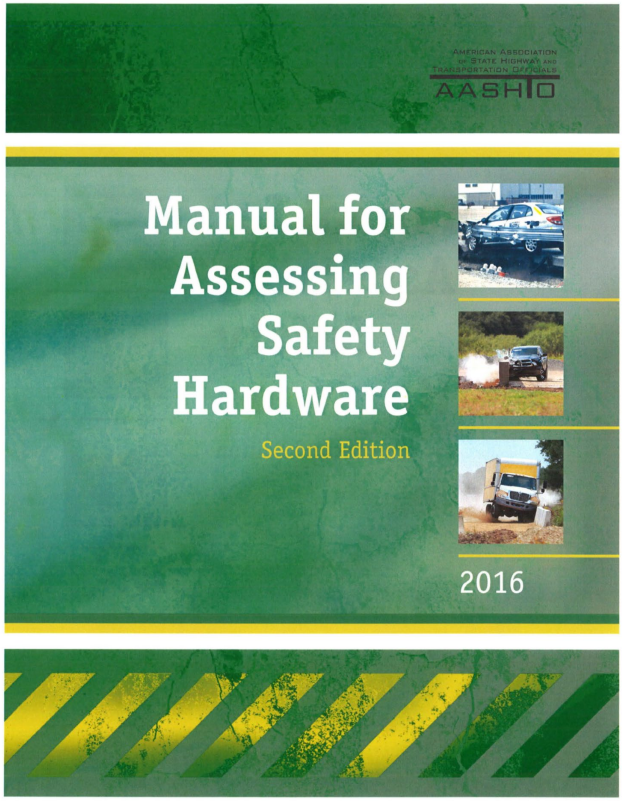

Roadside Hardware Test Matrices

- Purpose
  - Establish minimum level of performance
  - Establish basis for comparison of alternatives
- Philosophy of “worst practical conditions”
  - Evaluate devices over range of both potential and critical impact conditions with limited crash tests
  - Consider the general class and function of the safety feature
- Test levels defined to accommodate speeds and vehicle types for various applications
  - TL-1 ➔ low speed, passenger vehicles
  - TL-2 ➔ intermediate speed, passenger vehicles
  - TL-3 ➔ high speed, passenger vehicles
  - TL-4 ➔ high speed, single unit truck
  - TL-5 ➔ high speed, tractor van-trailer
  - TL-6 ➔ high speed, tractor tank-trailer

MASH Vehicles and Impact Conditions

- Vehicles
  - Practical representation of passenger vehicle fleet with limited no. of test vehicles
    - ≈ 5th percentile small passenger vehicle
    - ≈ 95th percentile passenger vehicle
  - Heavy commercial vehicles
- Impact Conditions
  - Speed and angle based on reconstruction of crashes
  - 85th percentile speed
    - 62 mph (TL-3)
  - 85th percentile impact angle
    - 25 degrees (TL-3)

MASH Test Vehicles

Full-Scale Crash Testing

TL-3 Single Slope
Concrete Barrier
(62 mph, 25 deg.)

TL-2 Bridge Rail for
Low-Volume Roads
(44 mph, 25 deg.)

TL-6 Concrete Barrier
(50 mph, 15 deg.)

MASH Hardware Evaluation Methods

- Current roadside hardware evaluation
  - FHWA eligibility letter
  - States may self certify through their own process
- Full-scale crash testing
  - Run the complete matrix of tests
    - Currently only way to obtain FHWA eligibility letter
  - Run only critical tests
    - Provide justification for tests deemed non-critical
- Other methods
  - Engineering analysis
    - Structural calculations and comparison to existing tested hardware
  - Dynamic component testing of modifications
  - Computer simulation analysis

Full-Scale Crash Testing – Complete Matrix

- Midwest Guardrail System (MGS)
- MASH TL-3 longitudinal barrier test matrix
  - Test 3-10
    - 1100C, 62 mph, 25 deg.
  - Test 3-11
    - 2270P, 62 mph, 25 deg.

Partial Crash Test Matrix

- F-shape PCB
  - 2270P critical for structural loading and deflection
  - Previous safety shape parapet testing indicated acceptable small car occupant risk and vehicle stability
- Test 3-10 deemed non-critical
- Only test 3-11 conducted to evaluate safety performance

System Modification During Testing

- Thrie beam bullnose
  - Slotted thrie beam rail
    - Control forces and improve capture
  - Breakaway posts
    - Energy dissipation
  - Nose retention cables
    - Vehicle capture

MASH TL-3 Test Matrix

Test No.	Vehicle	Speed (km/h)	Angle (deg)	Impact Point	Other Notes
3-30	1100C	100	0	Center of nose @ ¼ offset	-
3-31	2270P	100	0	Center of nose	-
3-32	1100C	100	5/15	Center of nose	15-degree impact angle
3-33	2270P	100	5/15	Center of nose	15-degree impact angle
3-34	1100C	100	15	CIP for capture/redirection	CIP selected at post no. 2 of the system
3-35	2270P	100	25	CIP for capture/redirection	CIP selected at post no. 3 of the system
3-36	2270P	100	25	CIP @ transition to rigid structure	Deemed non-critical if using MASH TL-3 AGT
3-37a	2270P	100	25	CIP for reverse direction	Deemed non-critical
3-37b	1100C	100	25	CIP for reverse direction	CIP selected 2,876 mm upstream from the end post in the system
3-38	1500A	100	0	Center of nose @ ¼ offset	Deemed non-critical based on 1500A estimation procedure

System Modification During Testing

Test 3-35

Test 3-32

Test 3-34

System Modification During Testing

- Test 3-30 ➔ Vehicle penetration

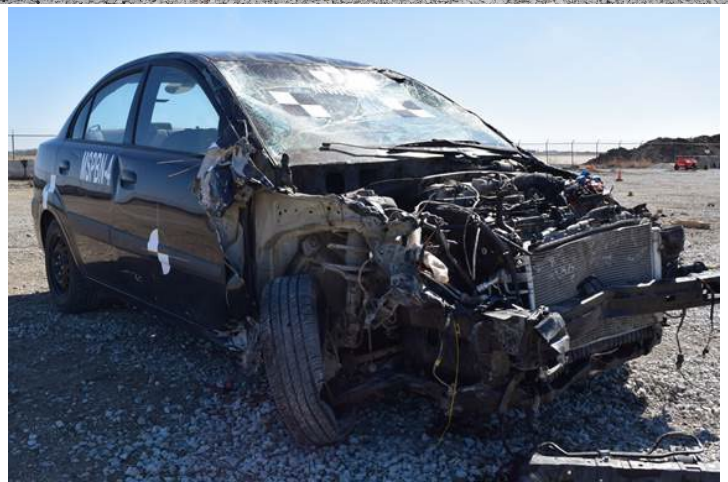

System Modification During Testing

- Additional nose cable behind lowest thrie beam corrugation
  - Test nos. 3-34 and 3-35 on side of system and unaffected by additional cable
  - Test no. 3-32 – angled impact on nose captured without additional cable
- Additional cable does not affect previous testing
- Remaining tests run successfully
  - System deemed MASH TL-3 compliant

Engineering Analysis

- NCHRP 20-7 Task 395 - MASH Equivalency of NCHRP Report 350 Approved Bridge Railings
  - Review and evaluation of existing bridge railings
    - Stability – Height and shape
    - Strength – Structural analysis
    - Geometry – Snag potential
  - 22 bridge rails analyzed
    - 12 satisfactory
    - Non-satisfactory still may meet full-scale crash testing

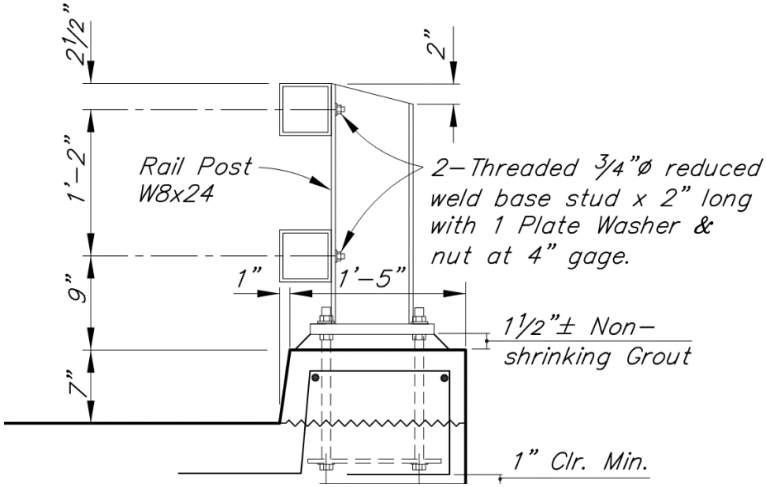

Alaska Multi-State Bridge Rail

Dynamic Component Testing

- Iowa BR27C Bridge Rail
  - Cast-in-place anchorage
- Designed epoxy anchorage options and compared to original design through dynamic component testing

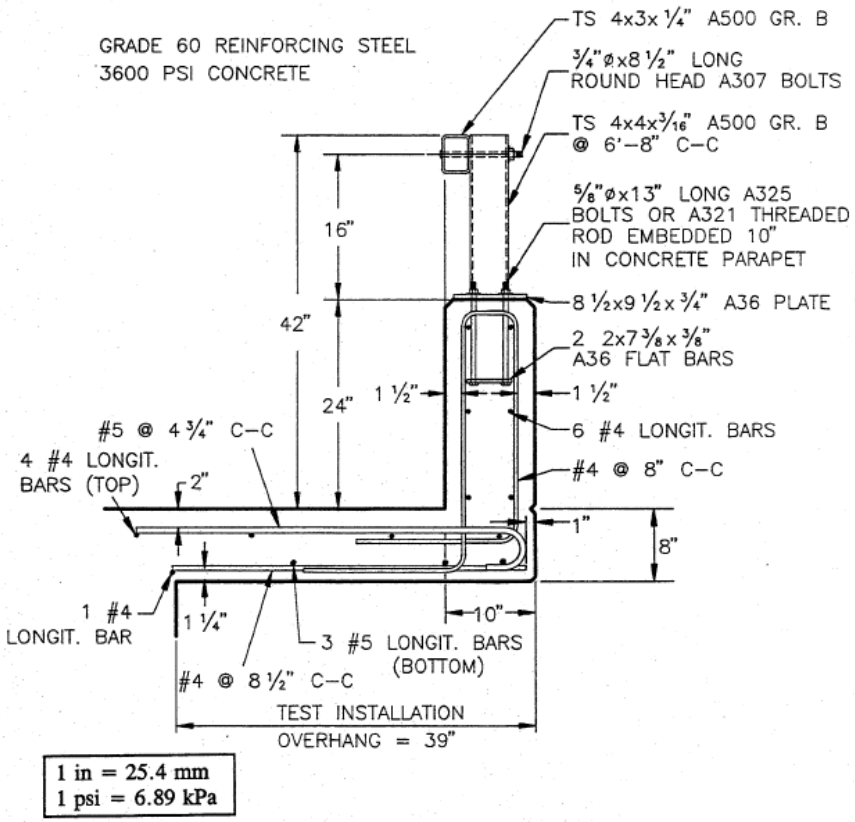

Anchorage Options

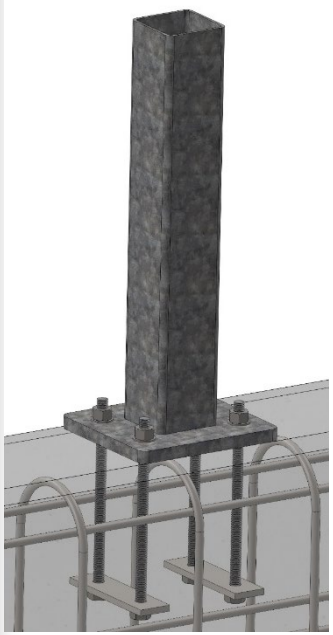

Original
Cast-in-Place

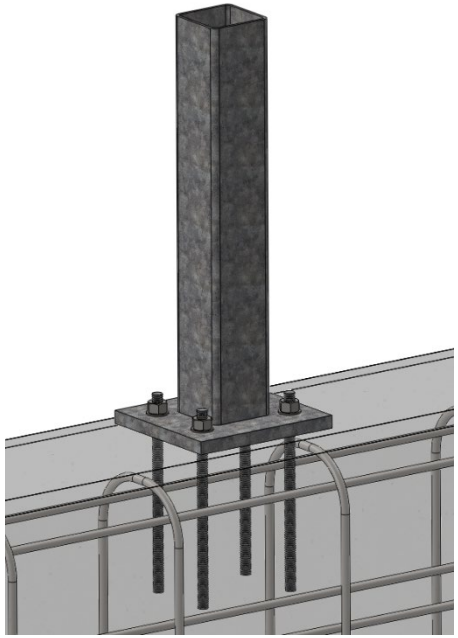

Iowa US 20 Bridge
Hardin, IA

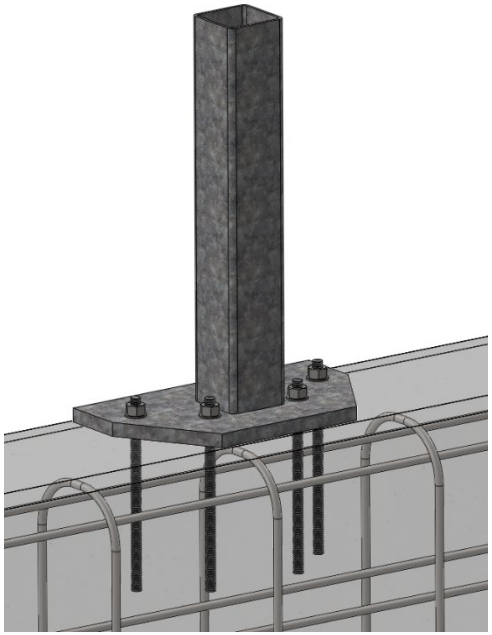

Four Anchor
Spread Concept

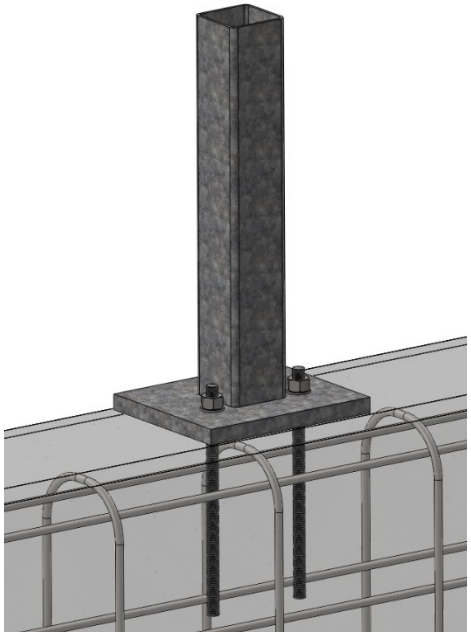

Two Anchor Offset
Concept

Anchorage Options

Original Cast-in-Place

Iowa US 20 Bridge Hardin, IA

Four Anchor Spread Concept

Two Anchor Offset Concept

Comparison – Anchor Forces

- All alternatives developed higher peak loads than cast-in-place BR27C
- Damage levels much greater than full-scale test
  - Indicates lower loading during actual vehicle impacts
- All three designs viable alternatives

Design Configuration	Peak Force (kips)
BR27C Cast-In-Place	22.9
Spread, Four-Anchor	24.9
Offset, Two-Anchor	28.3
US-20 Bridge	23.2

Computer Simulation

- Finite element analysis
  - Powerful tool for design and analysis
- Evaluation of hardware
  - Must validate models against existing test data to ensure accuracy
  - Still may not capture all possible failure modes
- Currently limited to evaluating limited changes to existing hardware
  - Not for evaluation of new hardware

Summary

- MASH provides guidance on evaluation of roadside hardware
  - Crash testing based on current vehicle fleet and worst practical impact conditions
  - Full-scale crash testing of entire matrix required for FHWA eligibility
  - States self certification
- Alternative evaluation methods exist
  - Reduced test matrices
  - Engineering analysis
  - Dynamic component testing
  - Computer simulation

Acknowledgements

- Midwest Pooled Fund Program
- Iowa DOT