Strengthening of Local Bridges in Wisconsin to Remove Load Postings

Alex Pence, PE, SE

WisDOT Bureau of Structures

Local Agency Bridge Innovation and Demonstration Days
Independence, IA

BUREAU OF STRUCTURES

June 15, 2022

Presentation Overview

- Load Postings on WI Local System
- Strengthening Program Overview
- Example Projects

Load Postings on the Local System

BUREAU OF STRUCTURES

Wisconsin Bridge Inventory

	State	Local
Bridges (Length ≥ 20 ft)	5,347	8,935
Average Age	36 years	41 years
% Structurally Deficient	134 (2.5%)	771 (8.6%)
Weight Limit Postings	17 (0.3%)	504 (5.6%)

Design Loads: State vs. Local

	State	Local
Designed for HS20 or HL93	88%	65%
Lighter Design Loads	12%	35%

Chapter Trans 214

TOWN ROAD BRIDGE STANDARDS

Trans 214.04 Minimum design standards. The following minimum standards for bridge design load and bridge width are established for improvements on town road bridges:

TRAFFIC VOLUME	BRIDGE DESIGN LOAD	BRIDGE WIDTH
(1) Under 250 ADT	H–15	24 feet
(2) 251 to 400 ADT	H–20	26 feet
(3) 401 to 1,000 ADT	H–20	28 feet
(4) 1,001 to 2,400 ADT	H–20	30 feet
(5) Over 2,400 ADT	State Trunk Highway Standards	

Note: Information on state trunk highway design standards may be obtained from the DOT Division of Highways and Transportation Facilities, P. O. Box 7916, Madison, Wisconsin 53707.

History: Cr. Register, March, 1982, No. 315, eff. 4–1–82.

Posting Trucks

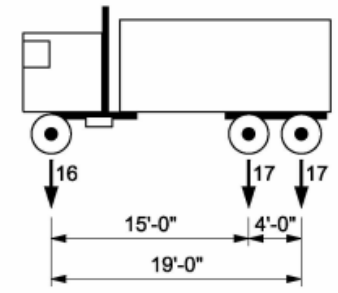

Type 3 Unit Weight = 50 Kips (25 tons)

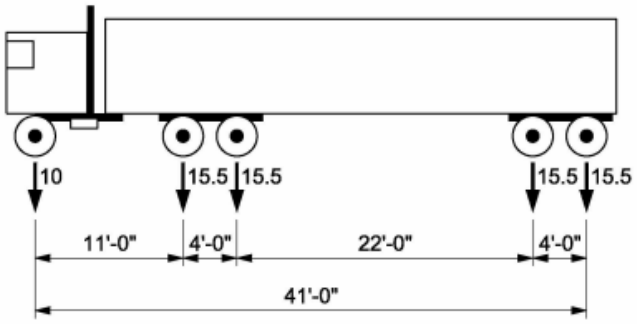

Type 3S2 Unit Weight = 72 Kips (36 tons)

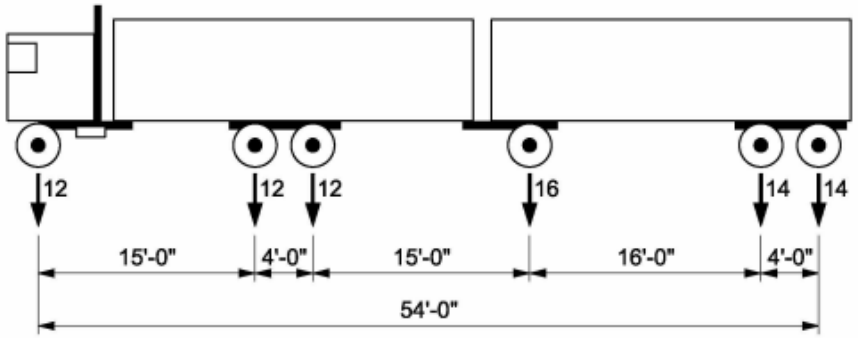

Type 3-3 Unit Weight = 80 Kips (40 tons)

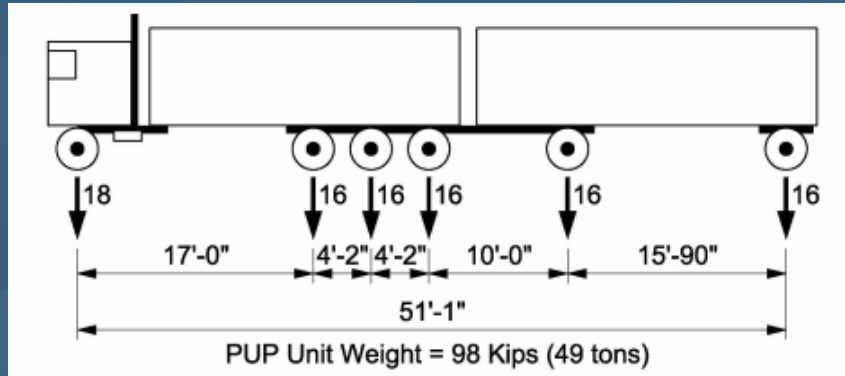

PUP Unit Weight = 98 Kips (49 tons)

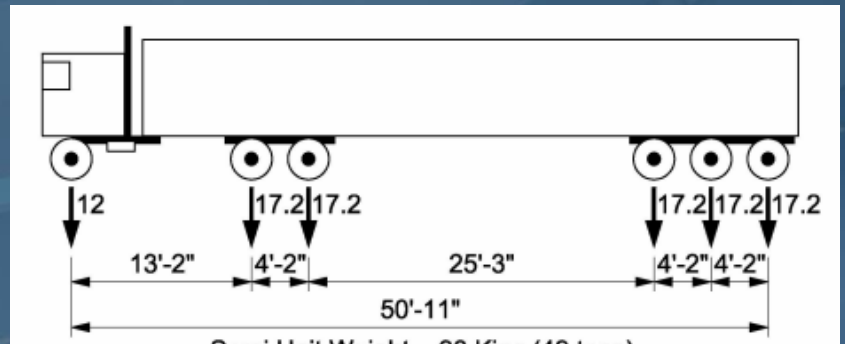

Semi Unit Weight = 98 Kips (49 tons)

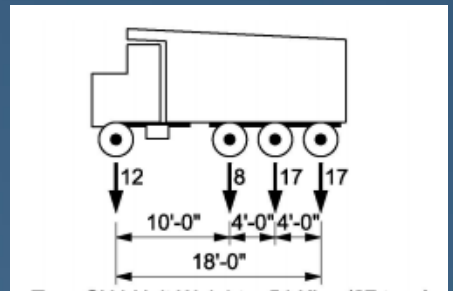

Type SU4 Unit Weight = 54 Kips (27 tons)

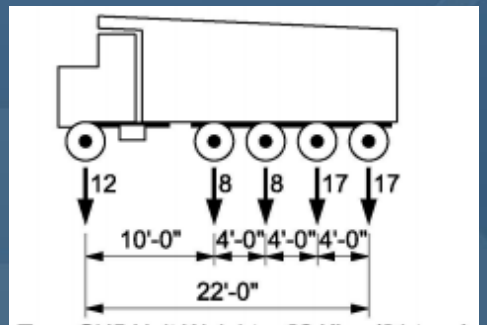

Type SU5 Unit Weight = 62 Kips (31 tons)

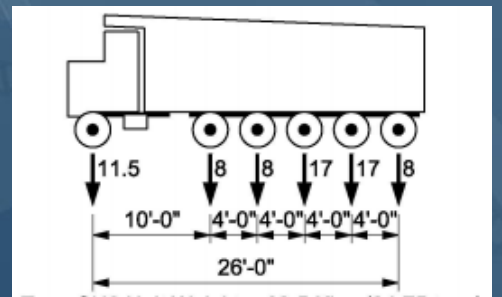

Type SU6 Unit Weight = 69.5 Kips (34.75 tons)

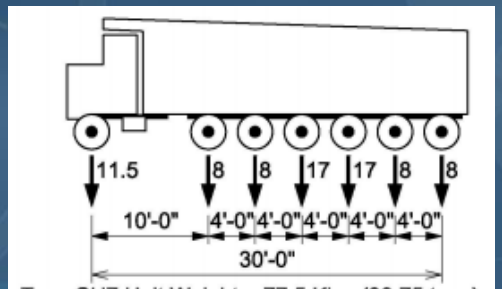

Type SU7 Unit Weight = 77.5 Kips (38.75 tons)

BUREAU OF STRUCTURES

Weight Limit Signs

SHV Load Posting Evaluation: Results

- What was the outcome?
  - Some new postings
  - Some lower load postings
- Concurrent Review
  - Overly conservative postings
  - Update evaluation methods
- Ongoing Efforts
  - Replacements
  - Strengthening
  - Refined Analysis

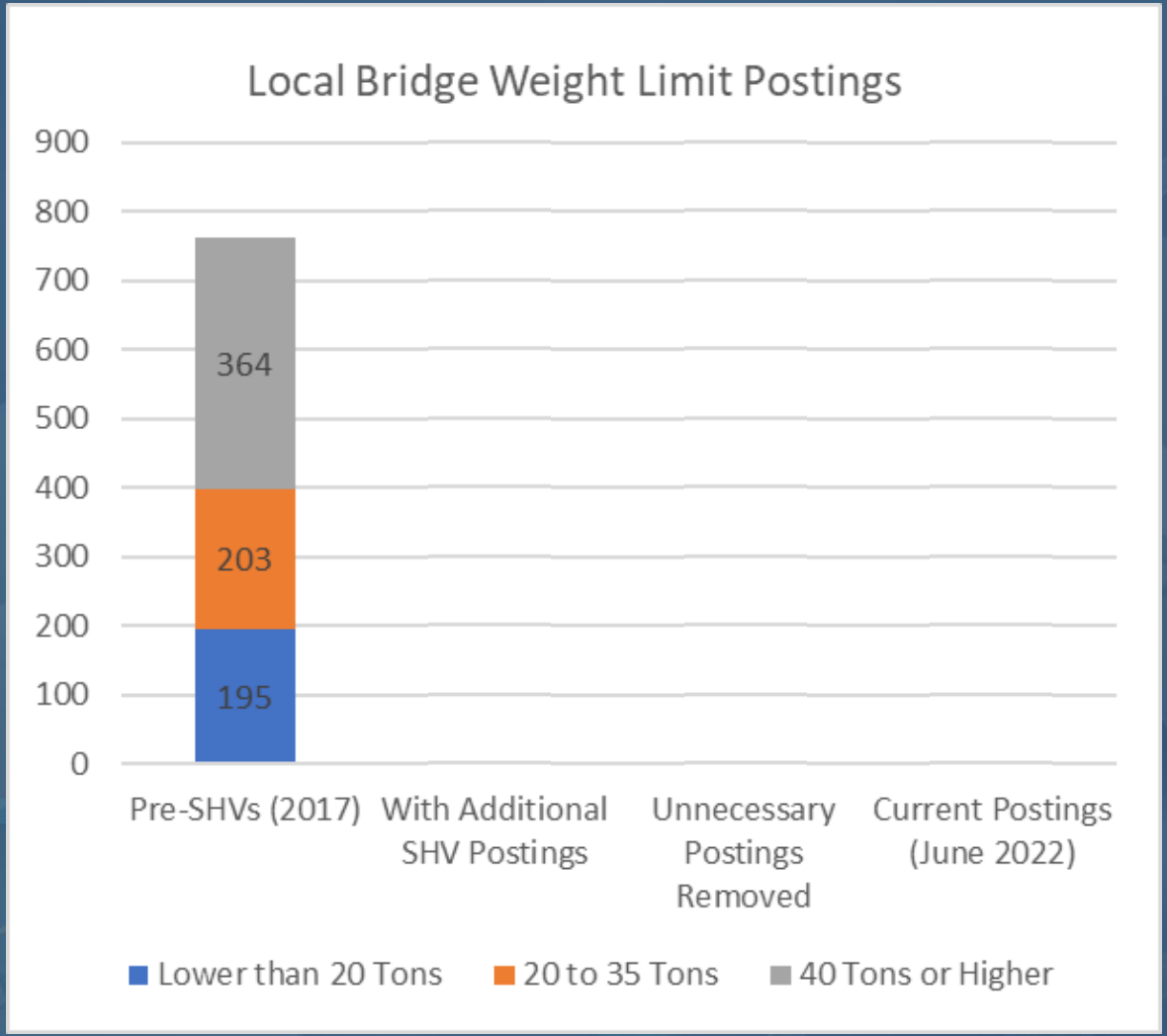

FAST Act – Emergency Vehicles

- May exceed Standard Weight Limits everywhere in Wisconsin
- Signs required on Interstate bridges or within reasonable access (1 mile)
  - Completed Sept. 2020
  - Outreach thru Firefighter Associations
- All other bridges: online list
  - Targeting early 2023

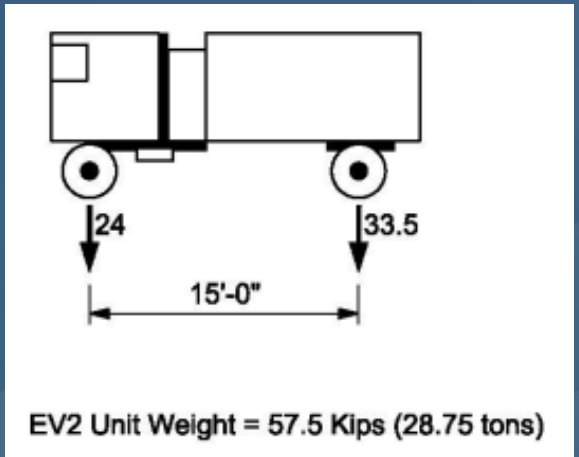

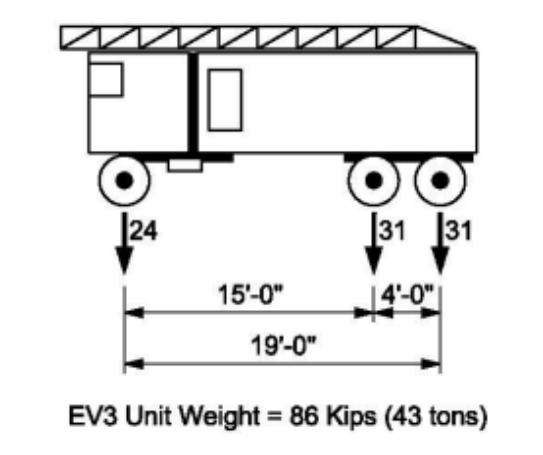

Strengthening Program Overview

BUREAU OF STRUCTURES

The Problem

Weak Bridges + Good Condition = Ineligible for LBP Funding

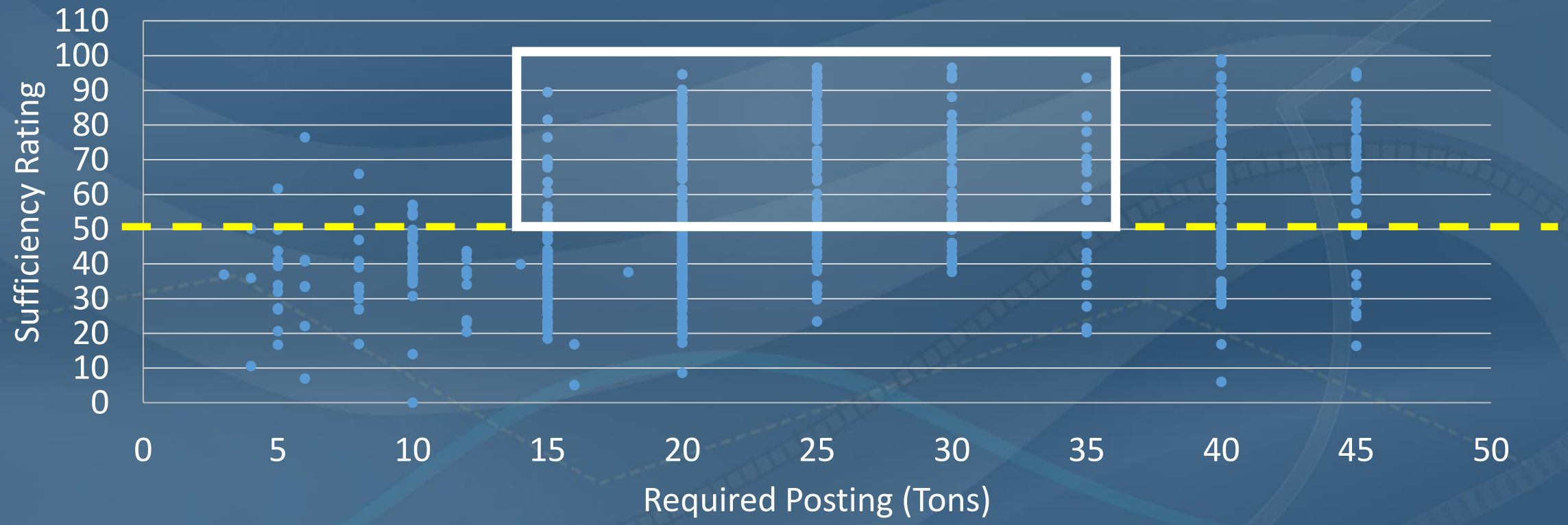

BUREAU OF STRUCTURES

Strengthening Program: Overall Concepts

- Remove postings for bridges with significant service life remaining
  - Not on track for Local Bridge Improvement Assistance Program
- Work with local owners to implement cost-effective, stream-lined process to strengthen bridges and remove postings
- BOS to provide engineering and oversight for retrofits
- Primarily use local crews to perform retrofits
- Limited scope (pursue projects with minimal environmental impact)
- Identify common solutions for multiple bridges

Project Selection

- Want to target "high value" bridges – important for freight & commerce
- Consider life remaining (condition)
- Not every strengthening option is feasible for every bridge

Best Candidates screening group:

- Not in program for replacement
- Posting < 40 TON
- All NBI Conditions 5+
- ADT 100+ *or* ADT<100 w/ 10+ mi Detour

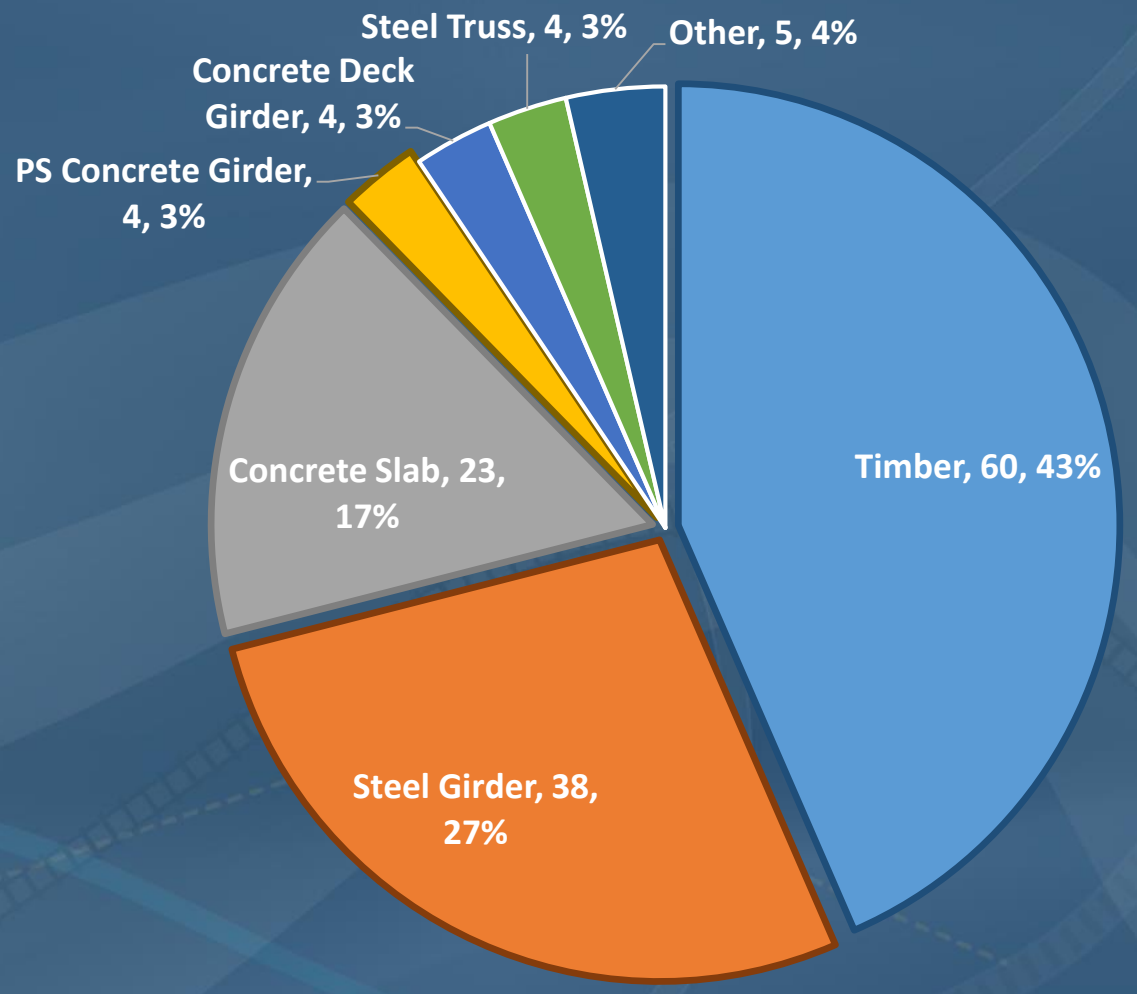

Refined Analysis Screening

- Refined analysis goes above and beyond the routine or traditional methods of analysis
  - 3D FE modeling (CSI Bridge)
- Taking advantage of
  - Better live load distribution
  - Additional stiffness (e.g. monolithic parapet)

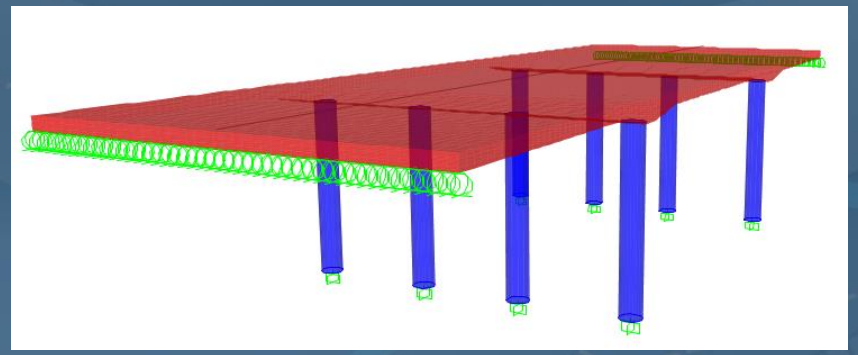

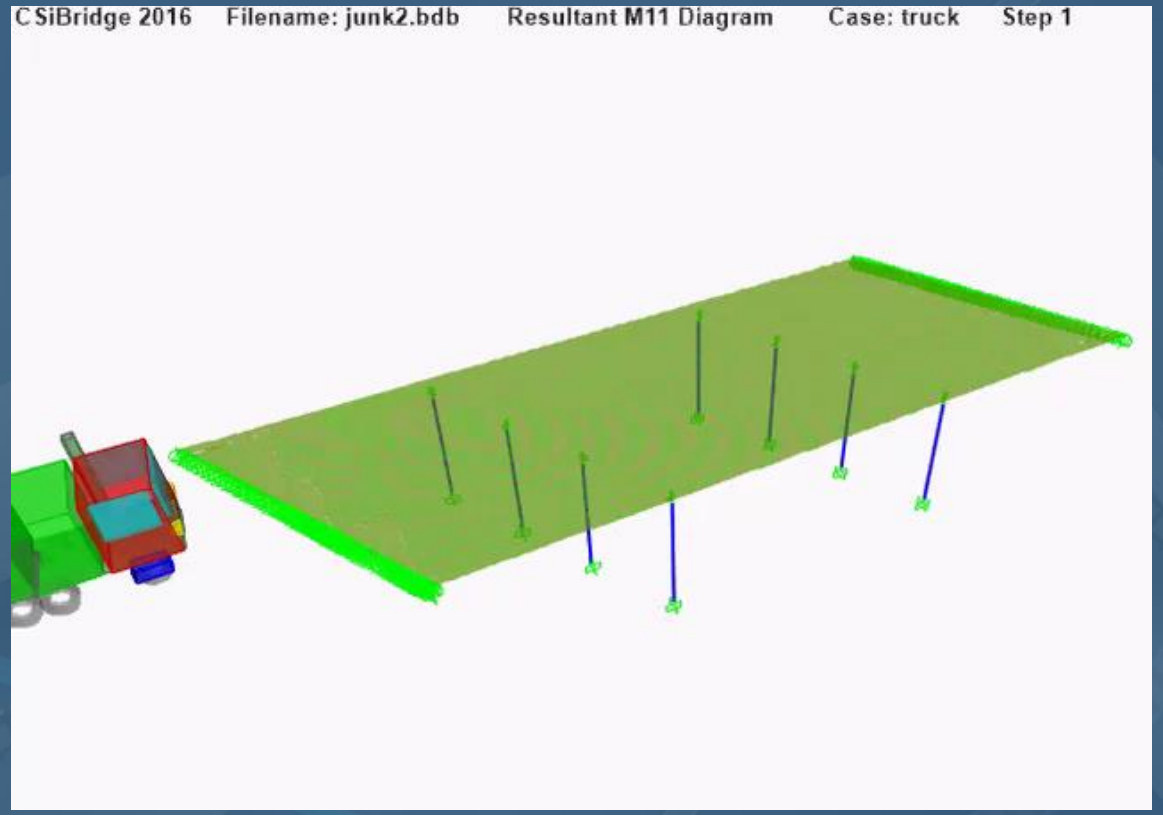

Example Projects

BUREAU OF STRUCTURES

Pilot Projects

- Timber Slab – Spreader Decks
  - 7 Projects Avg Cost: $45,000 ($56/sf)
- Steel Girders – Adding Plates/Angles
  - 1 Project Avg Cost: $18,000 ($17/sf)
- Superstructure Replacement (Steel Girders → Timber Slabs)
  - 2 Projects Avg Cost: $72,000 ($96/sf)
- Concrete Slab – Negative Moment (Top) Reinforcement
  - 2 Projects Avg Cost: $33,000 ($15/sf)
- Concrete Slab – Positive Moment (Bottom) FRP
  - 4 Projects Avg Cost: $26,000 ($25/sf)

Timber Slab Retrofit

- Wheel Load Distribution

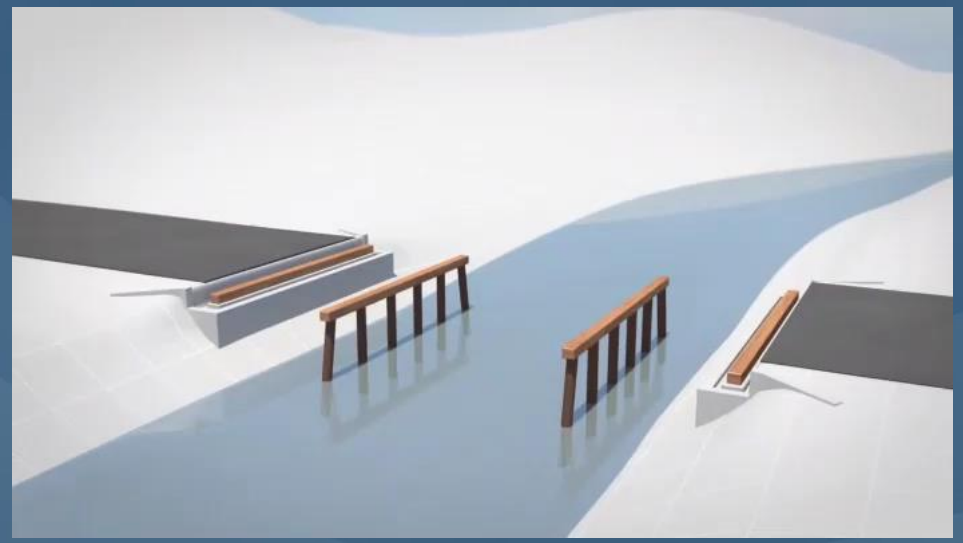

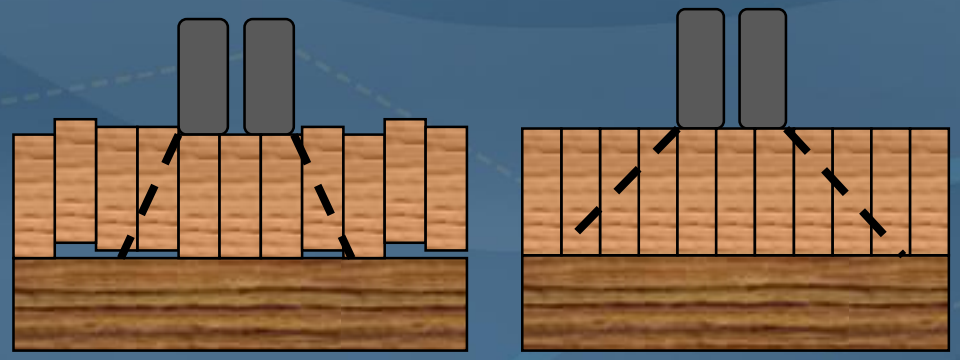

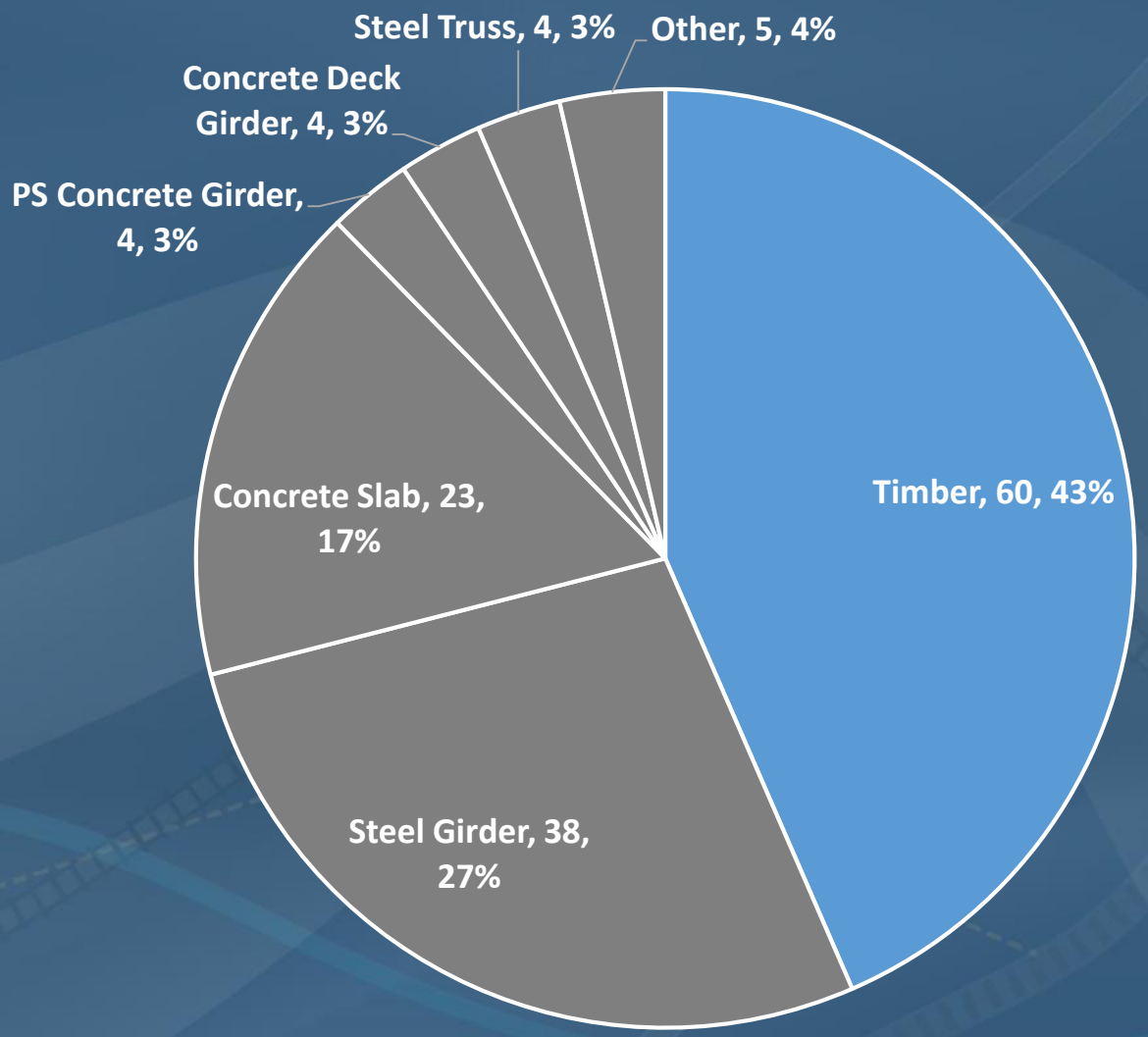

BUREAU OF STRUCTURES

Timber Slab Retrofit

- 7 completed through Local Bridge Strengthening Pilot Program
- 4 more funded/completed by other programs
- Typically $50-$60/sf

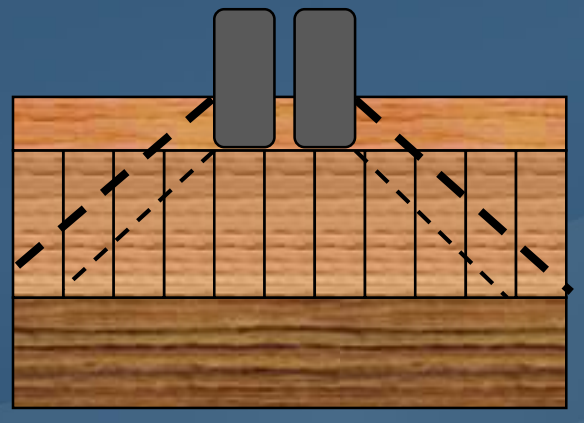

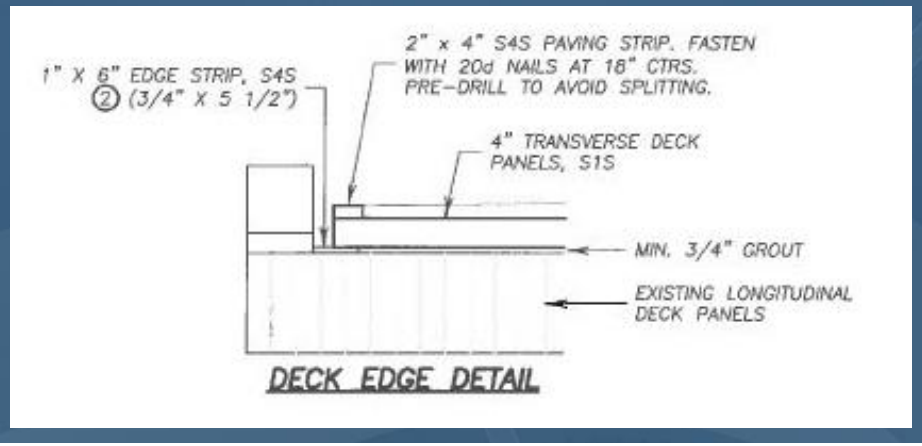

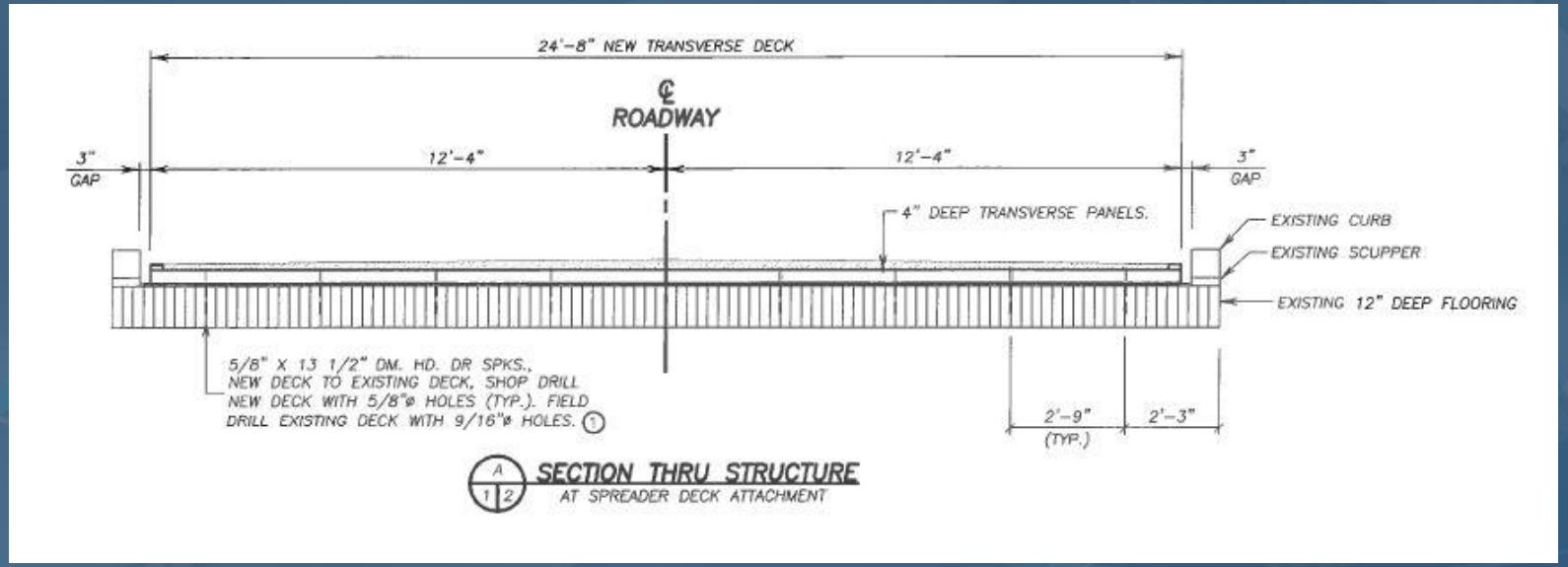

Timber Slab Spreader Deck

Timber Slab Spreader Deck

Timber Slab Spreader Deck

Timber Slabs – Follow Up Research

- Analytical and Testing Methods for Rating Longitudinal Laminated Timber Slab Bridges (December 2021)
  - WHRP / Iowa State University (Justin Dahlberg, Brent Phares, Zhengyu Liu)

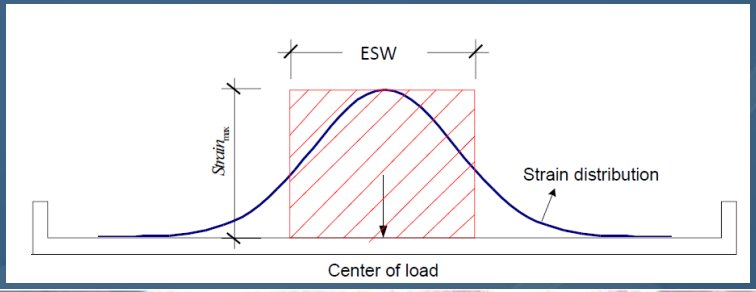

Wheel Load Distribution Width (inches)		
	Single Lane	Multi Lane
AASHTO Std Specs (2002) -- ASR	44	44
Assumed w/ 4" Spreader Deck	52	52
WHRP - No Spreader Deck	61.8	55.6
WHRP - 4" Spreader Deck	71.7	64.5
AASHTO LRFD -- LRFR	74.8	62.1

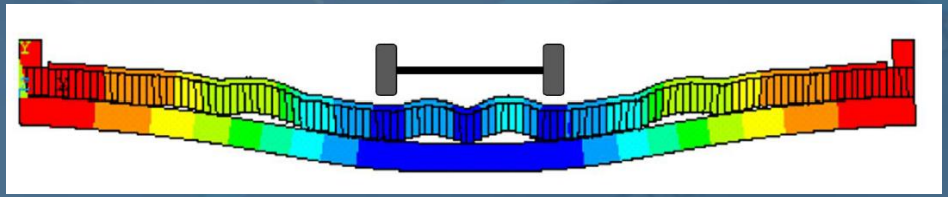

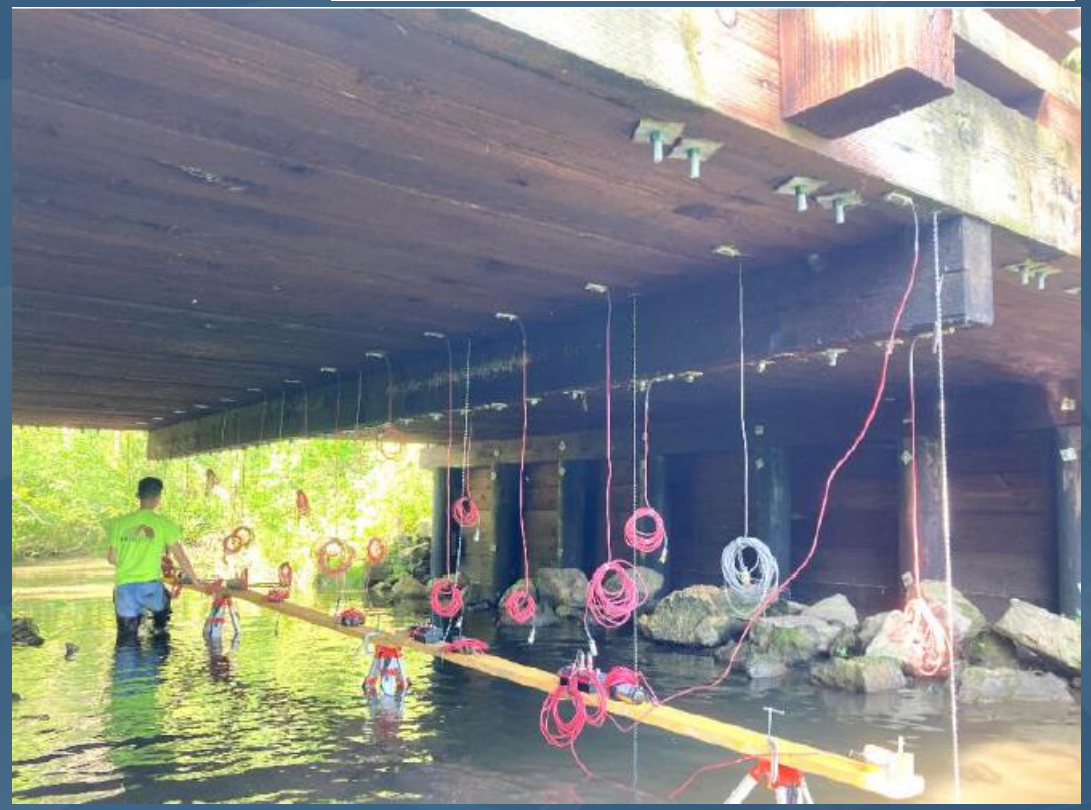

Steel Girder Retrofit

- Bolt additional steel section to existing members
  - Can often be done by state or local crews
  - Relatively inexpensive

P-16-47 | CTH B over Balsam Creek in Douglas County

Iowa DOT

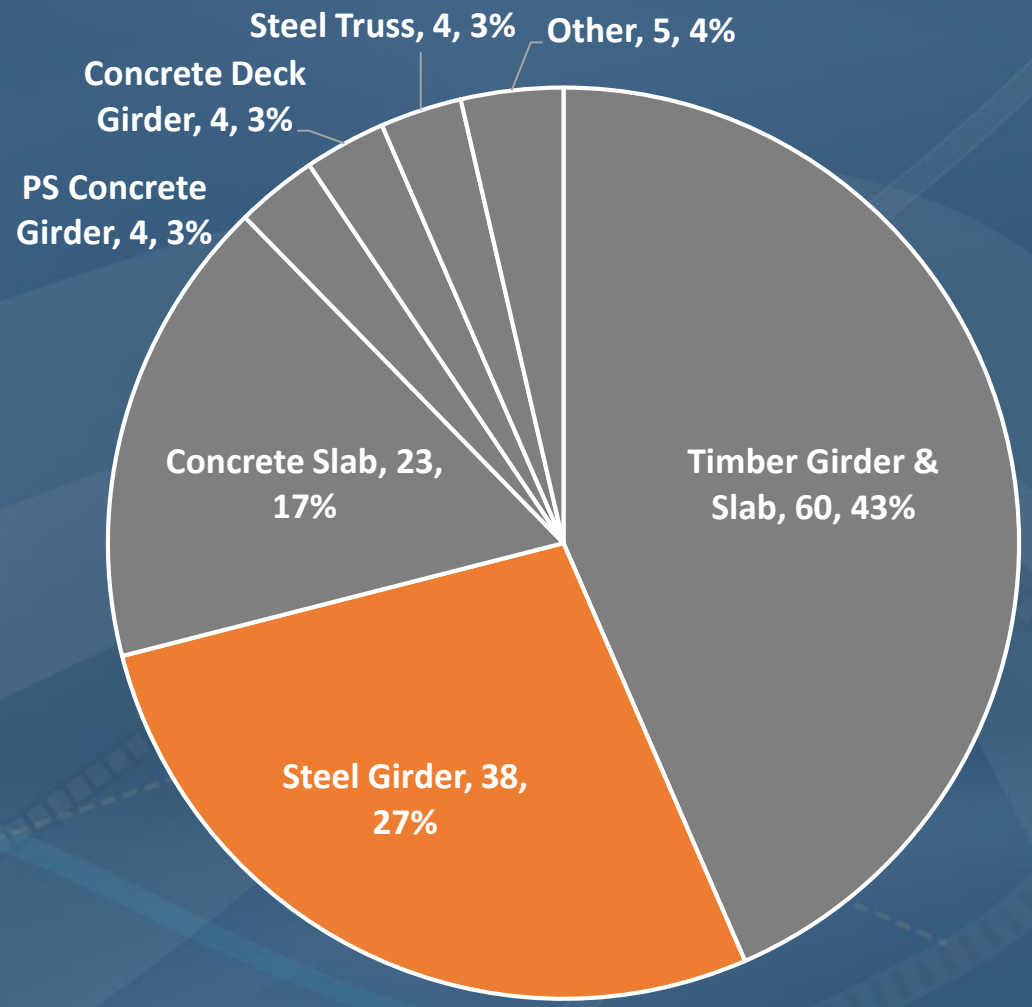

Steel Girder Retrofit

Steel Girder Retrofit

Steel Girder Retrofit

Superstructure Replacement w/ Timber Slab

Superstructure Replacement w/ Timber Slab

Concrete Slab Retrofit

- Concrete bridges
  - Add Steel Plates
  - Add FRP

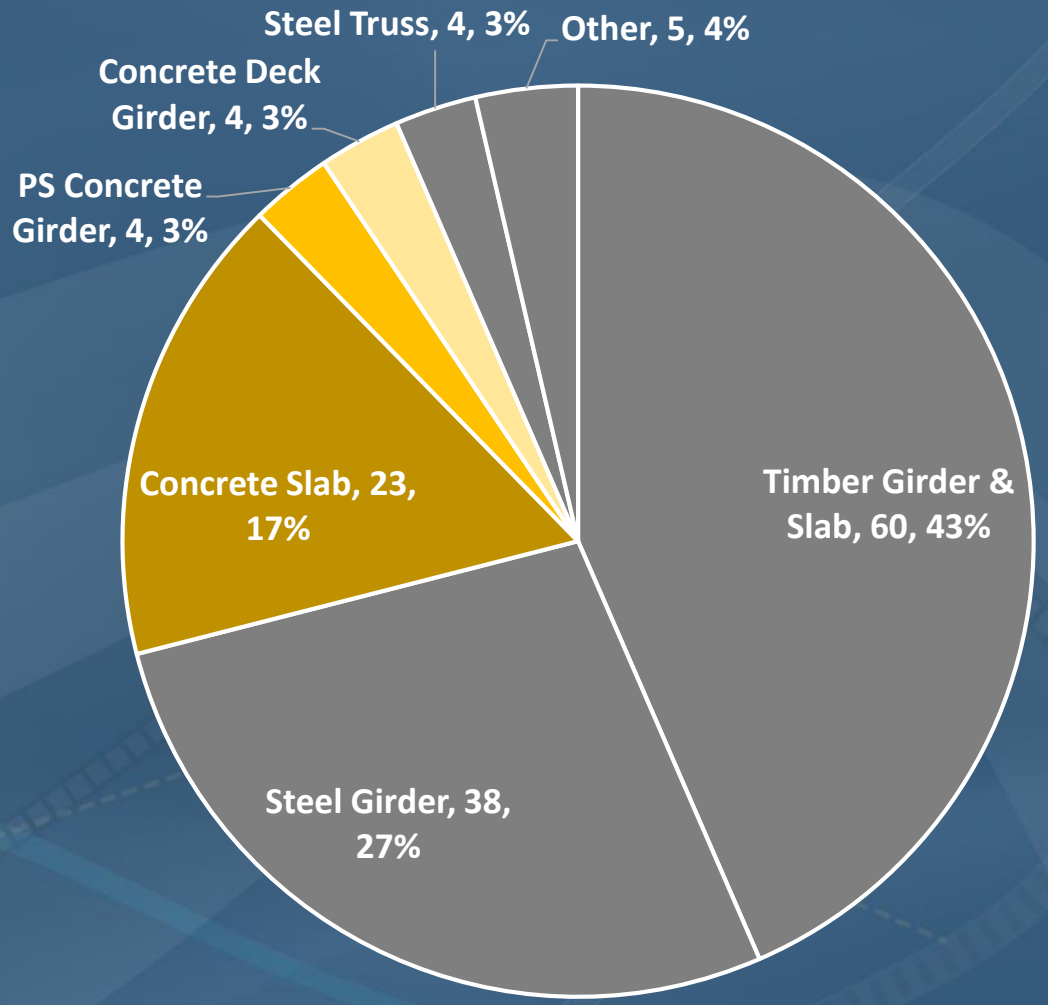

Changes in Demand

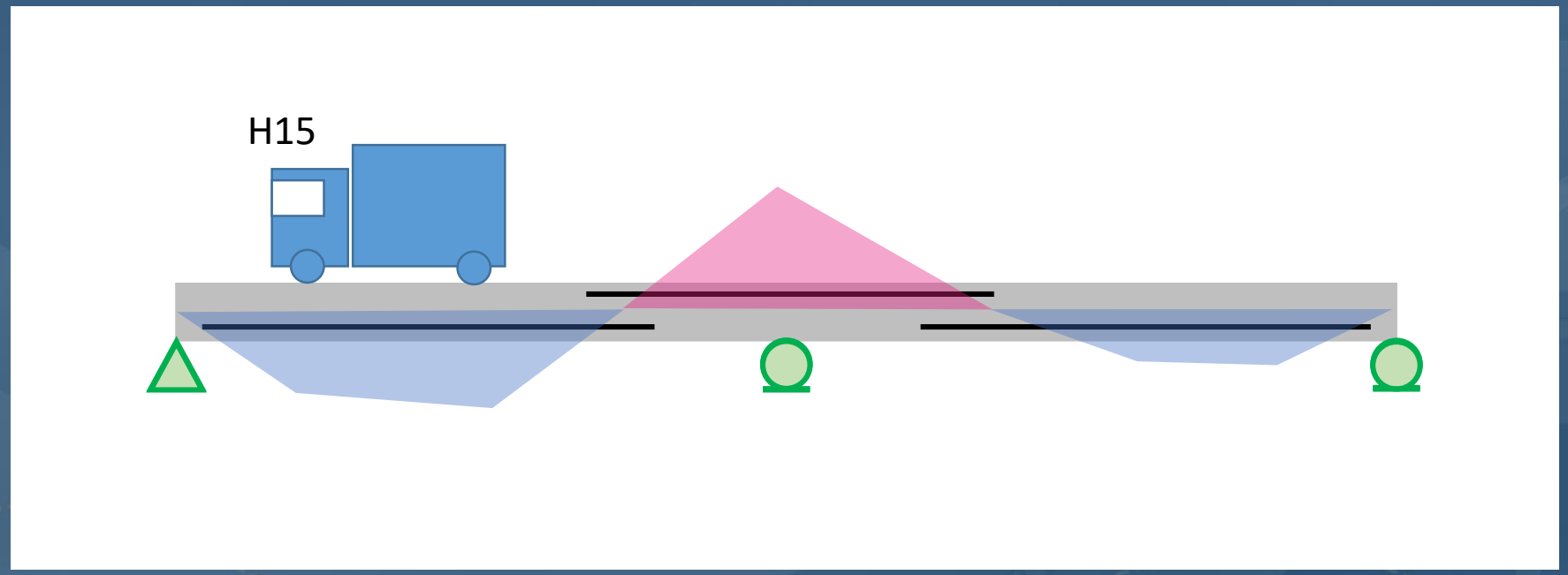

Changes in Demand

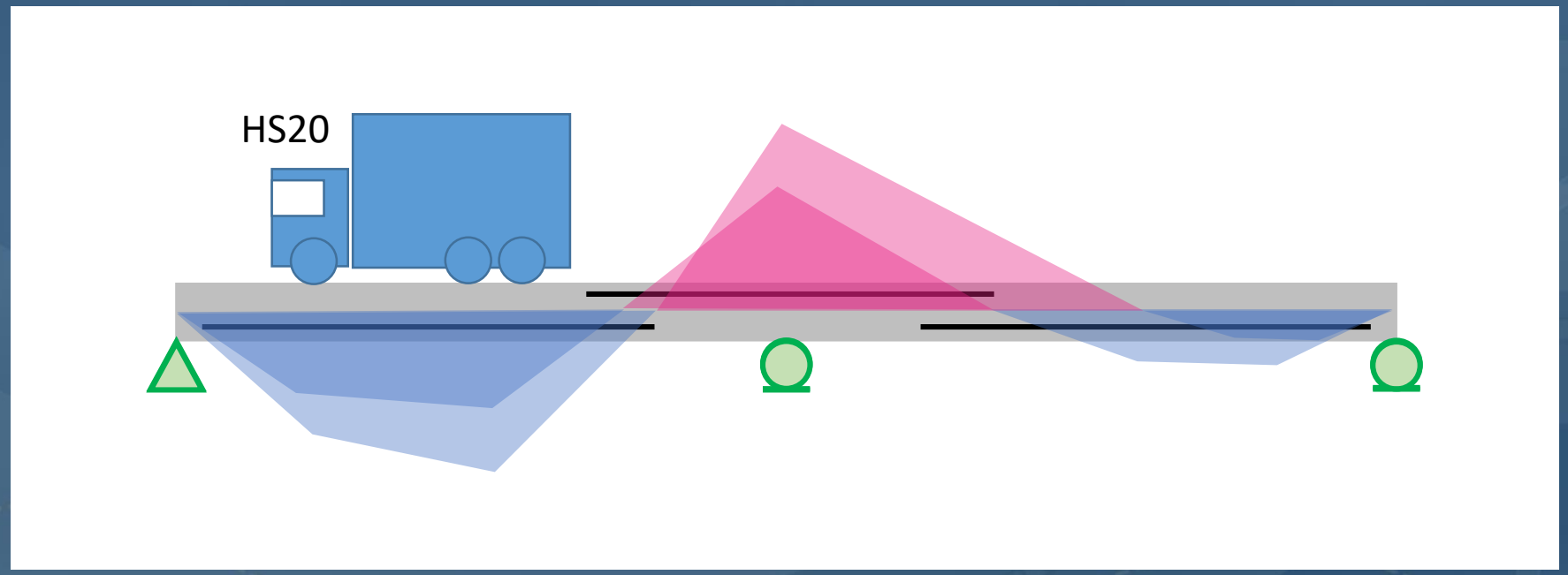

Changes in Demand

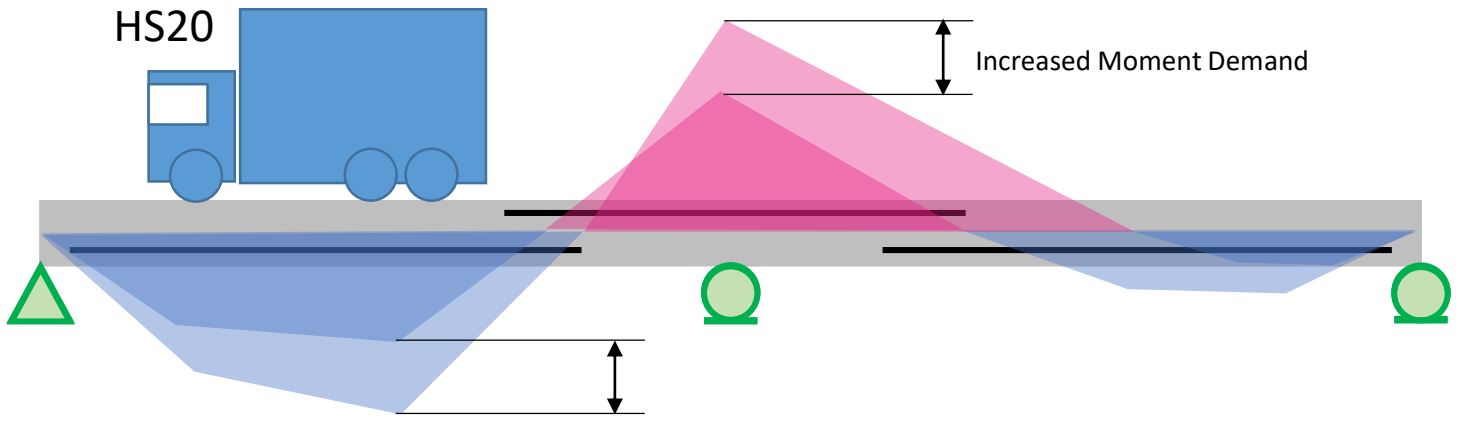

Changes in Demand

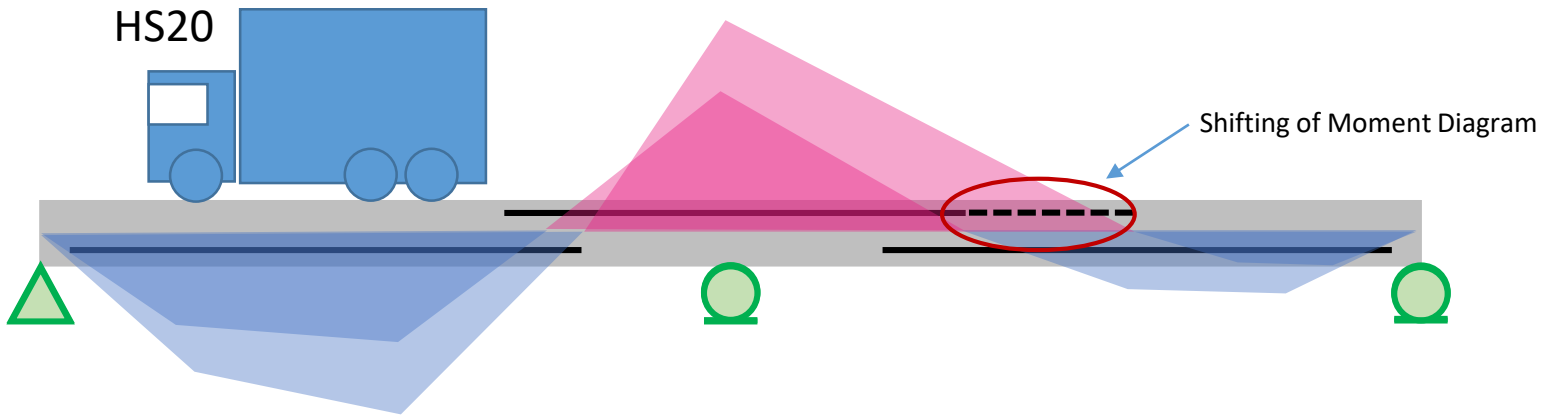

Concrete Slab – Top Surface Strengthening

Steel plates to extend negative moment reinforcement

Chippewa County Slab Retrofit

Concrete Slab – Top Surface Strengthening

Concrete Slab – Top Surface Strengthening

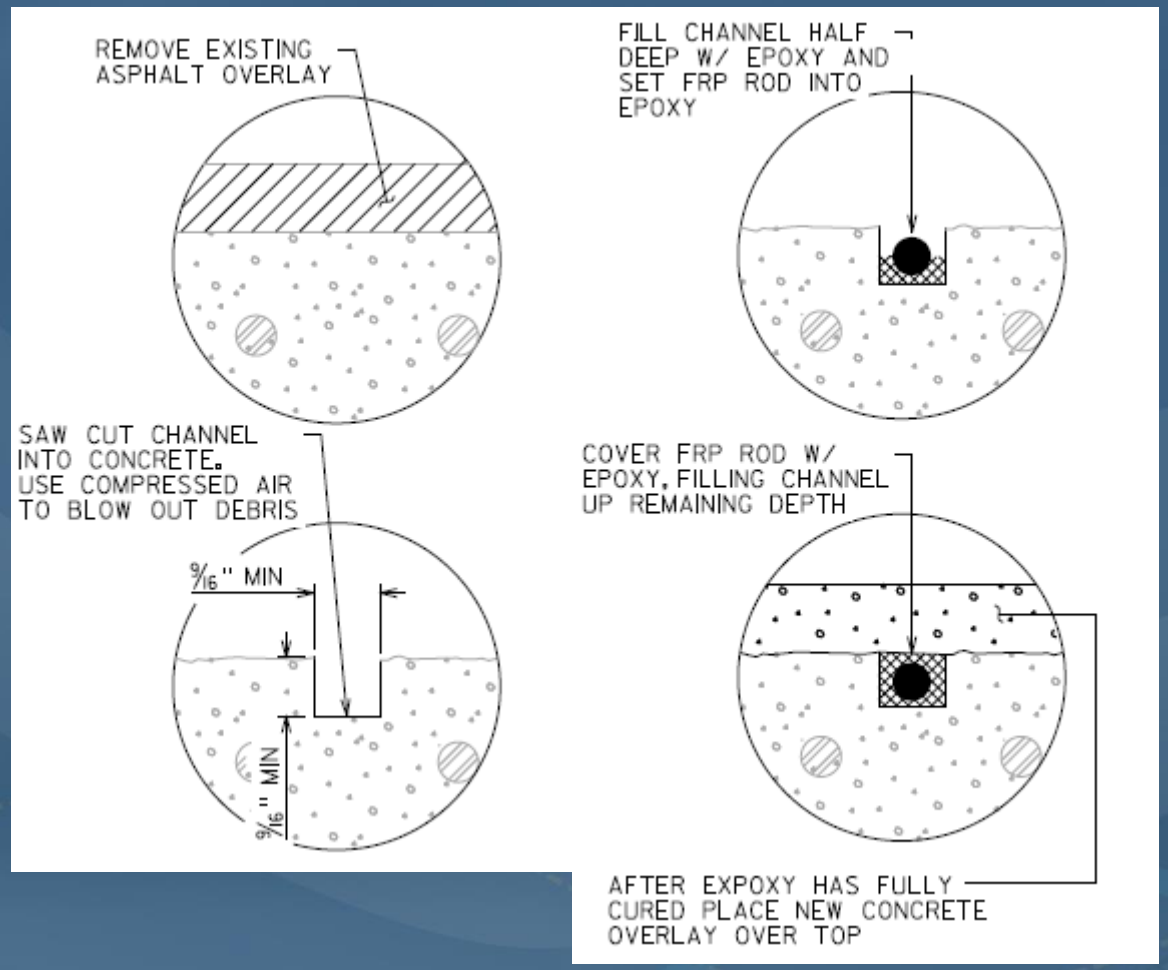

Concrete Slab – Top Surface Strengthening

Near Surface Mounted (NSM) Carbon FRP Rods

Concrete Slab – Bottom Surface Strengthening

Concrete Slab – Bottom Surface Strengthening

Concrete Slab – Bottom Surface Strengthening

Concrete Slab – Bottom Surface Strengthening

Concrete Slab – Bottom Surface Strengthening

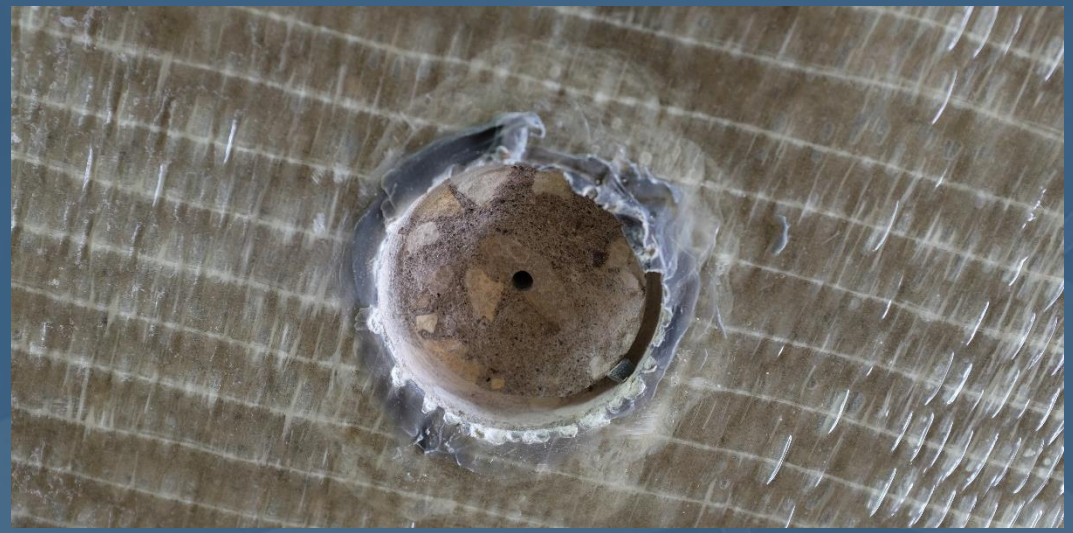

Pilot Program Evaluation

BUREAU OF STRUCTURES

Pilot Program Evaluation

- Cost-Benefit Success
  - Streamlined process to coordinate environmental impact
  - Resourcefulness of County Highway departments
  - DTSD BOS in-house engineering support and review of construction details
  - DTIM Local Programs & Finance execution of contracts and reimbursements

Pilot Program Evaluation

- Future Opportunities
  - Legislative changes required to extend program
  - Counties can implement similar projects on their own
  - Development of standard details or repairs
  - Implementation of new technology

For More Information:

Alex Pence

alex.pence@dot.wi.gov | 608-267-6880

BUREAU OF STRUCTURES