2nd International Conference on Timber Bridges

Ryan Woodward

Ted Zoli

Las Vegas, 2013

Two Bridges Built Using Black Locust Wood

HNTB

Squibb Bridge

Brooklyn, NY

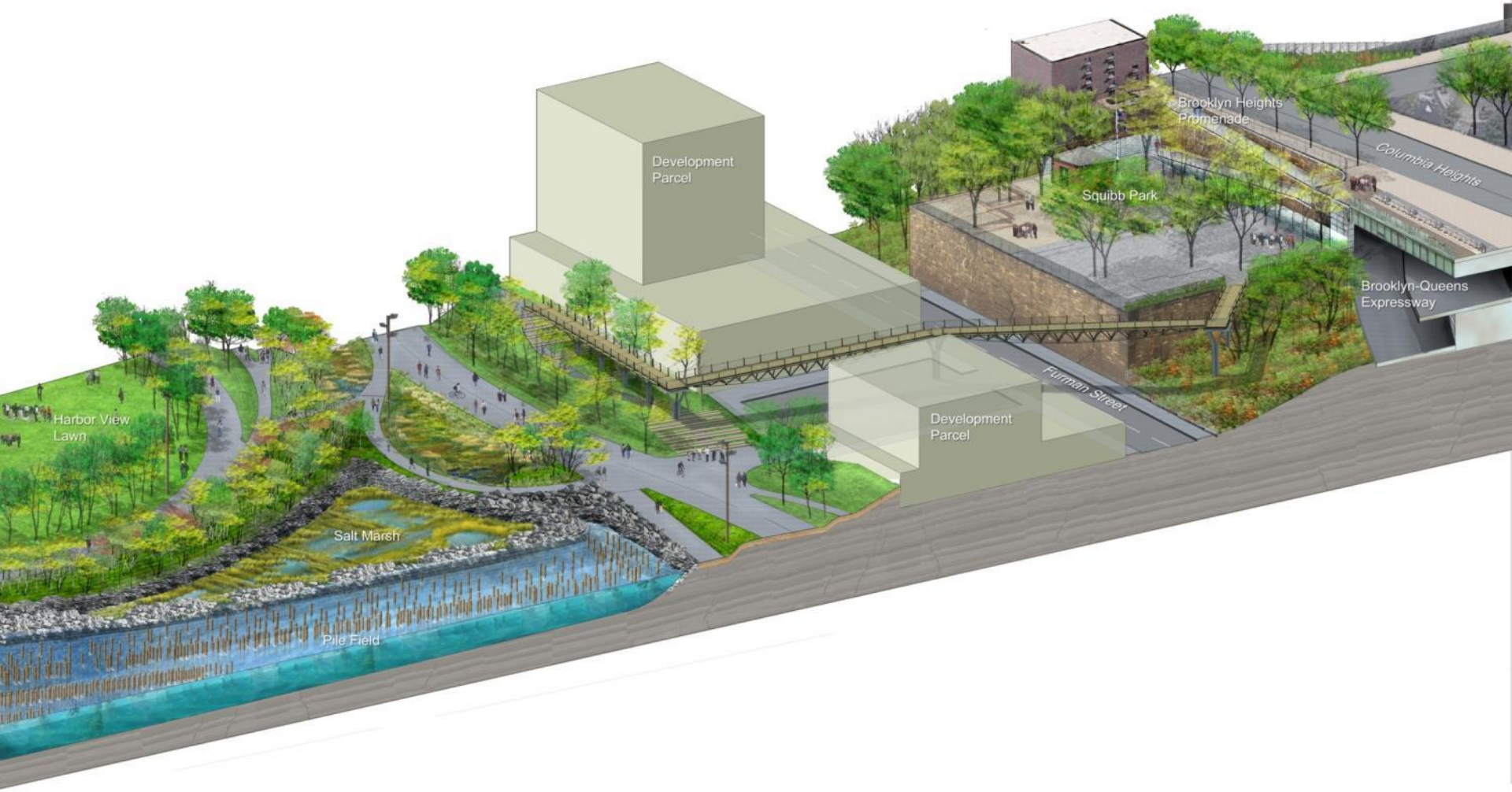

PLAN

Underslung Suspension Bridge:

- Highly efficient form
- Material palette from BBP
- Small dia. Black Locust
- Steel cables & connections

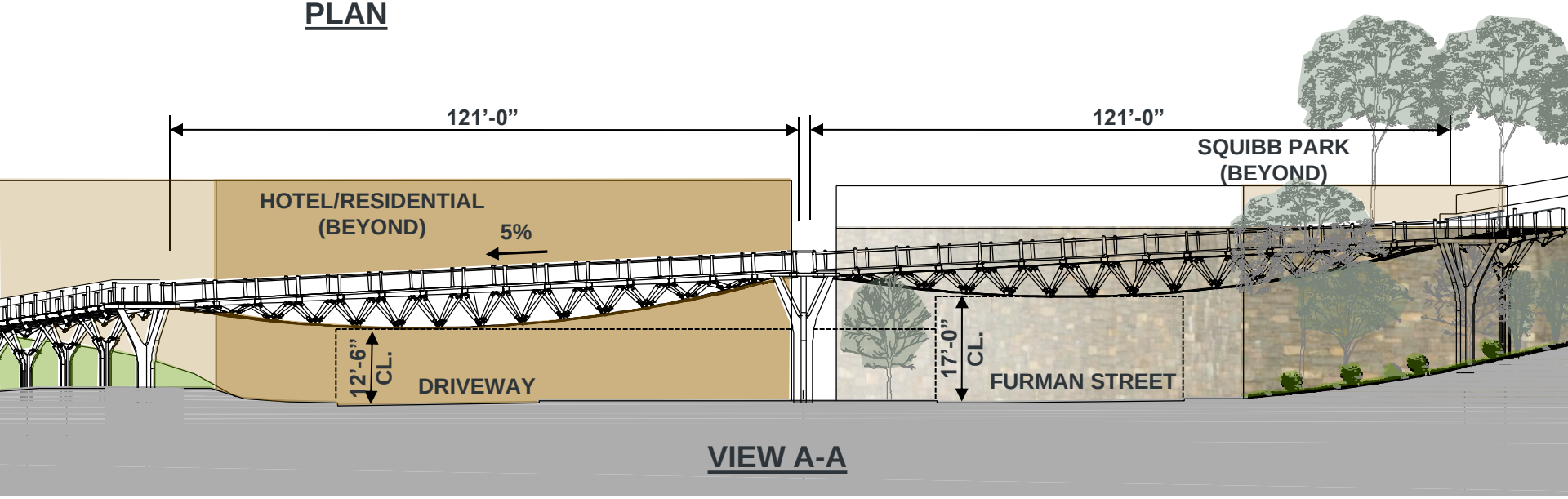

VIEW A-A

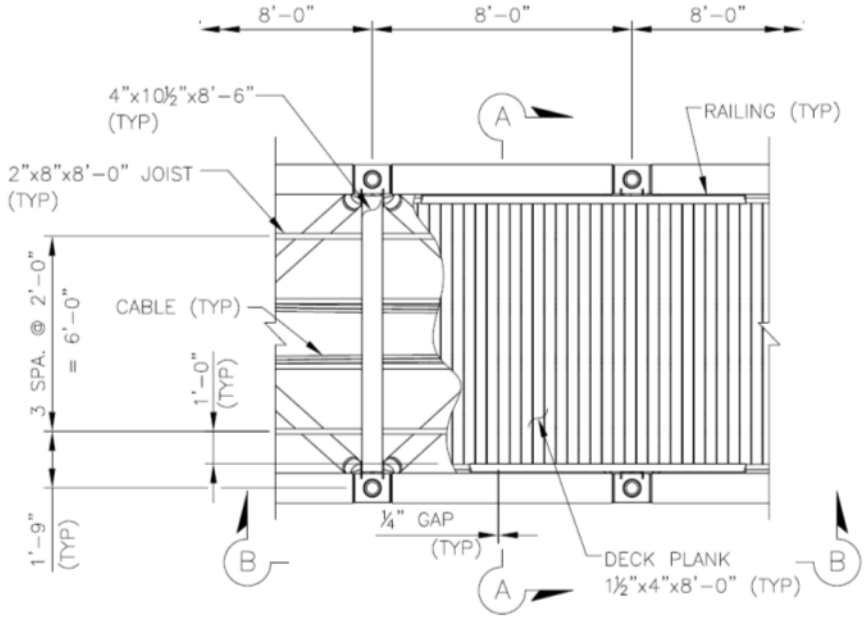

DECK PLAN

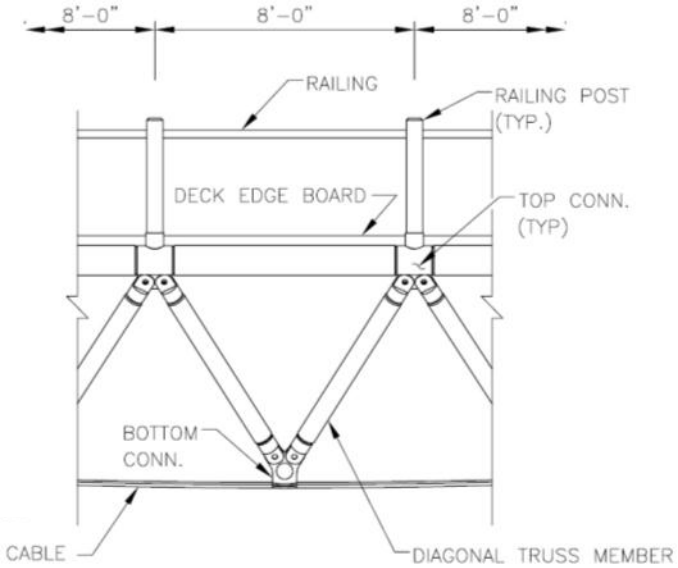

VIEW B–B

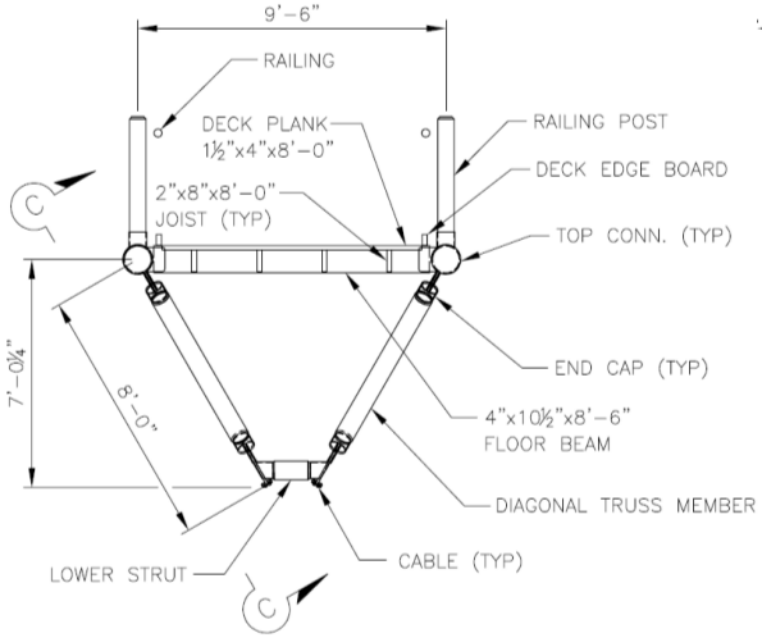

SECTION A–A

HNTB

Black Locust Timber:

- Sustainable
- Small diameters – harvested young
- Fast growth
- Locally sourced
- Rot resistant – no coating required

- Strong
- Low shrinkage
  (11.4% vol.)

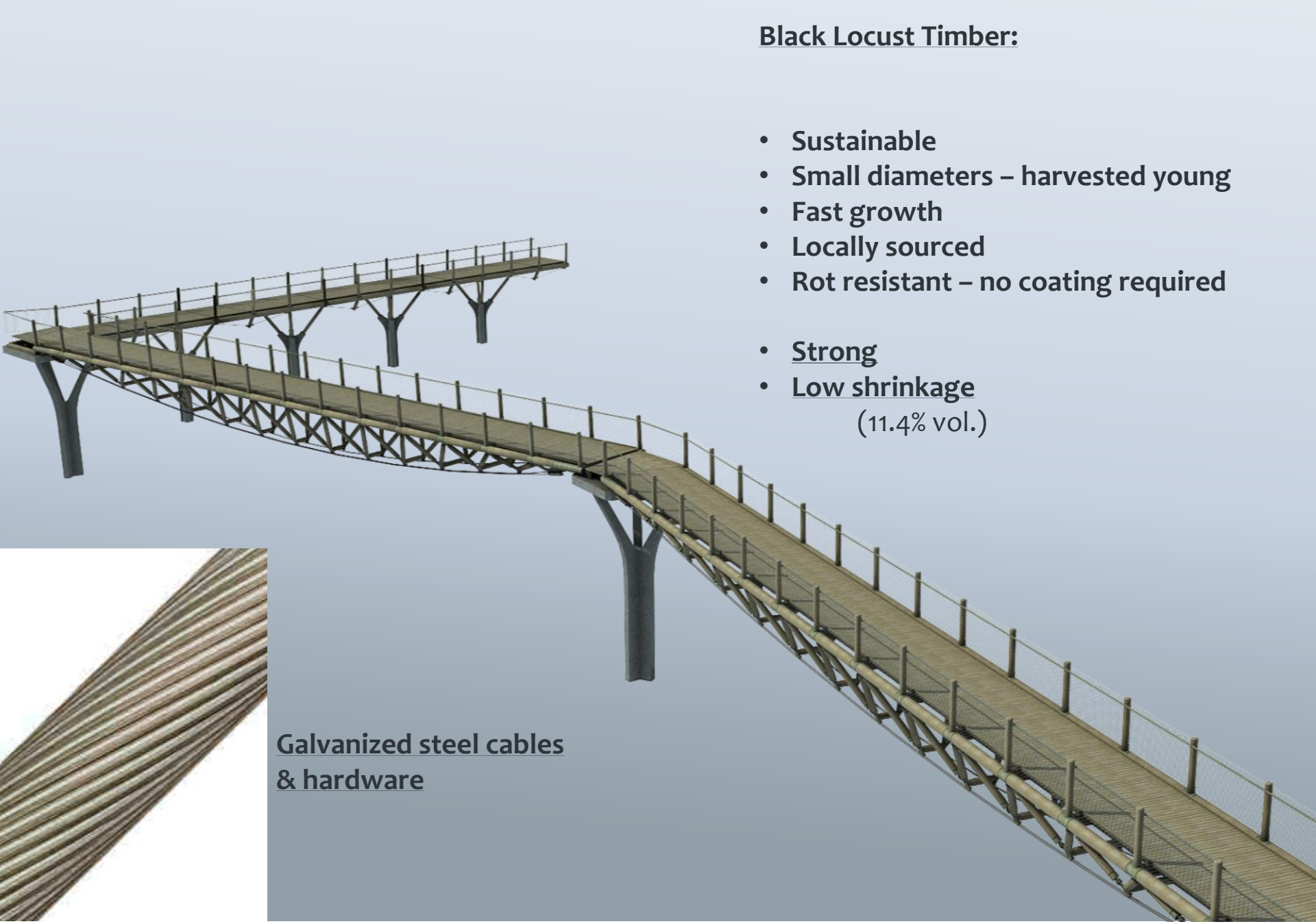

Galvanized steel cables
& hardware

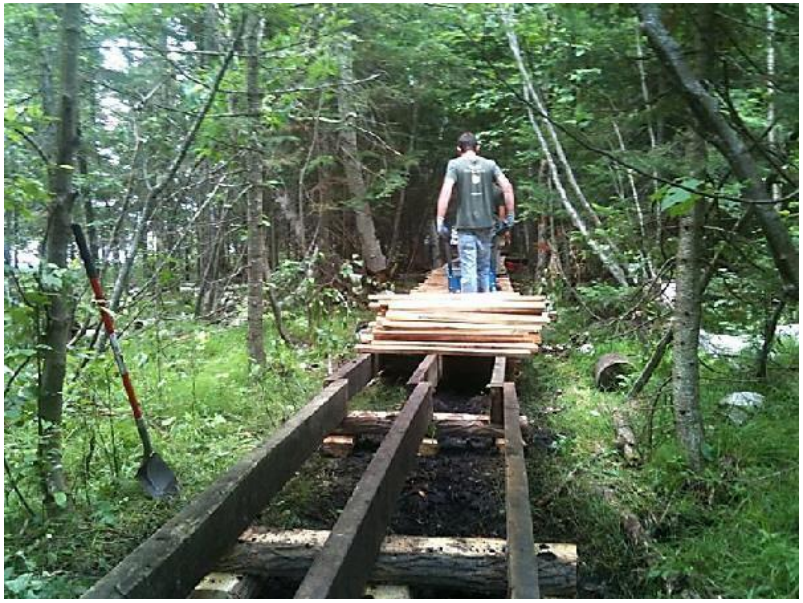

TWO BRIDGES BUILT USING BLACK LOCUST WOOD

Ratios of dry to green clear wood properties

Modulus of Rupture	Modulus of Elasticity	Compression Parallel to Grain
1.40	1.11	1.50

(ASTM D2555)

Locust Borer

(*Megacyllene robiniae*)

Lunch

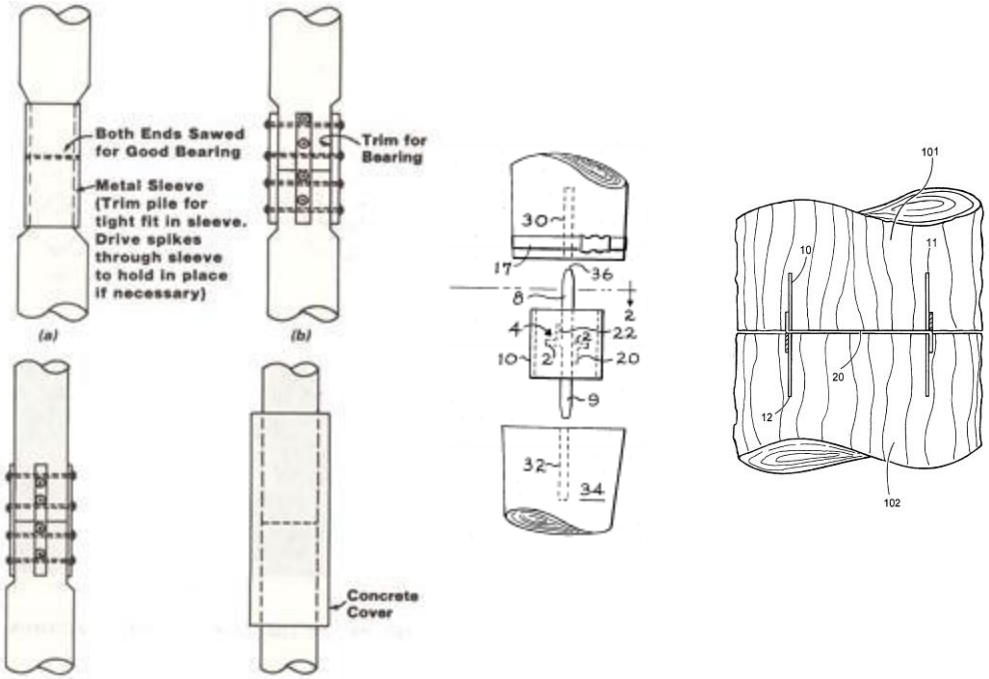

Timber Piles – standard and proprietary connections

Structural Systems - Triakonta:

Turning a Black Locust Log, Cornell University, 2010

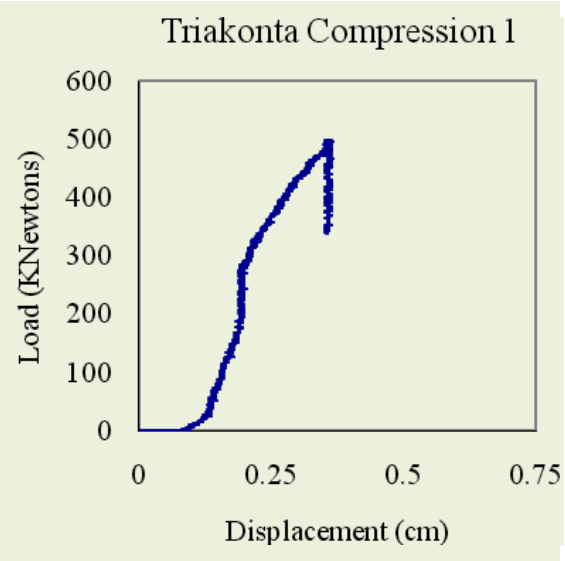

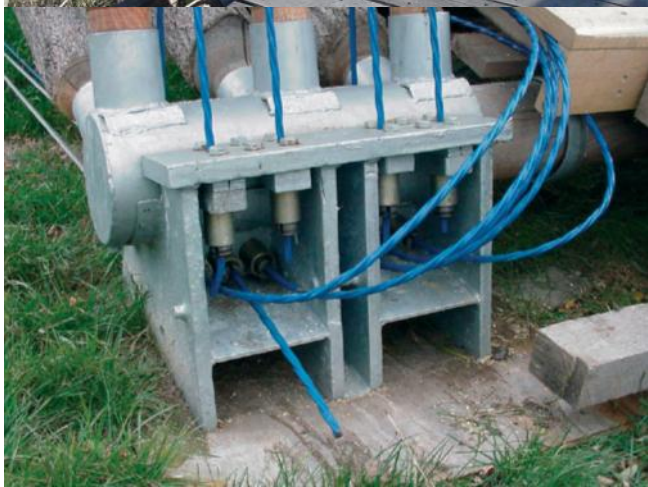

Structural Systems – Prestressed Segmented Arch:

Annular band connections on communication towers up to 40 m tall.

- Capped end connections
- Modular kit-of-parts
- Simple fabrication & erection

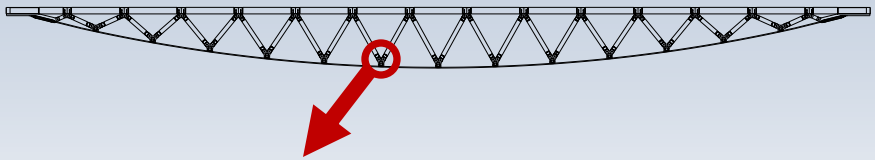

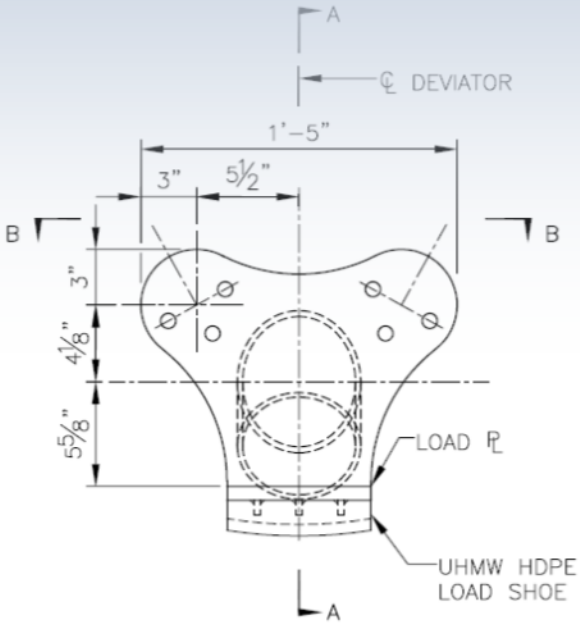

CABLE DEVIATOR

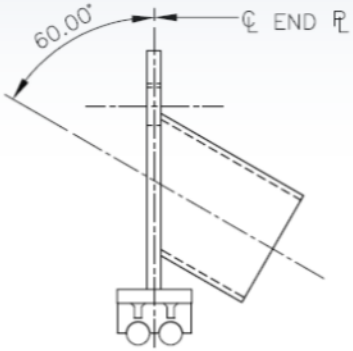

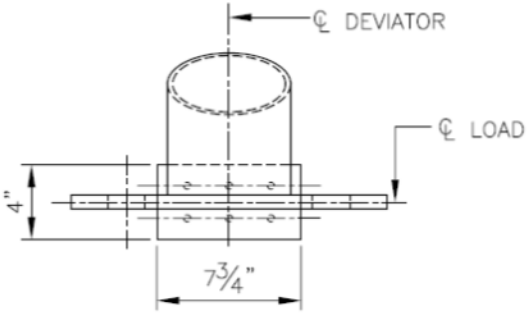

VIEW B–B

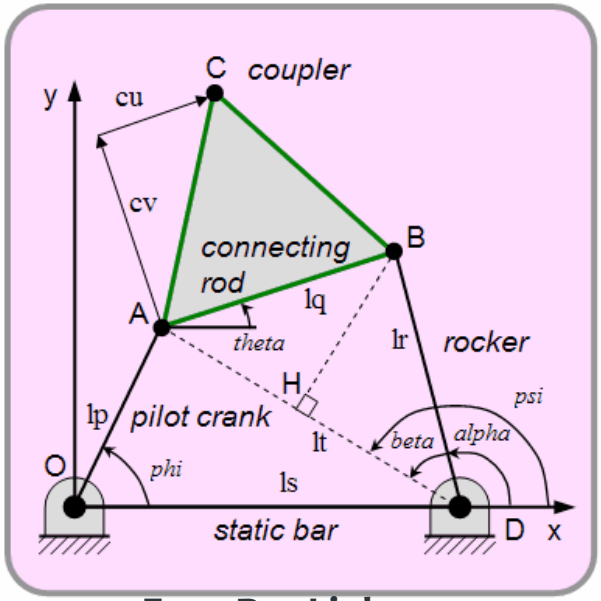

Four Bar Linkage

Squibb Bridge

Brooklyn, NY

TA Footbridge

Vassar College, Poughkeepsie, NY

Pressure treated wood deck, on unpainted steel beams

Advanced corrosion, significant section loss

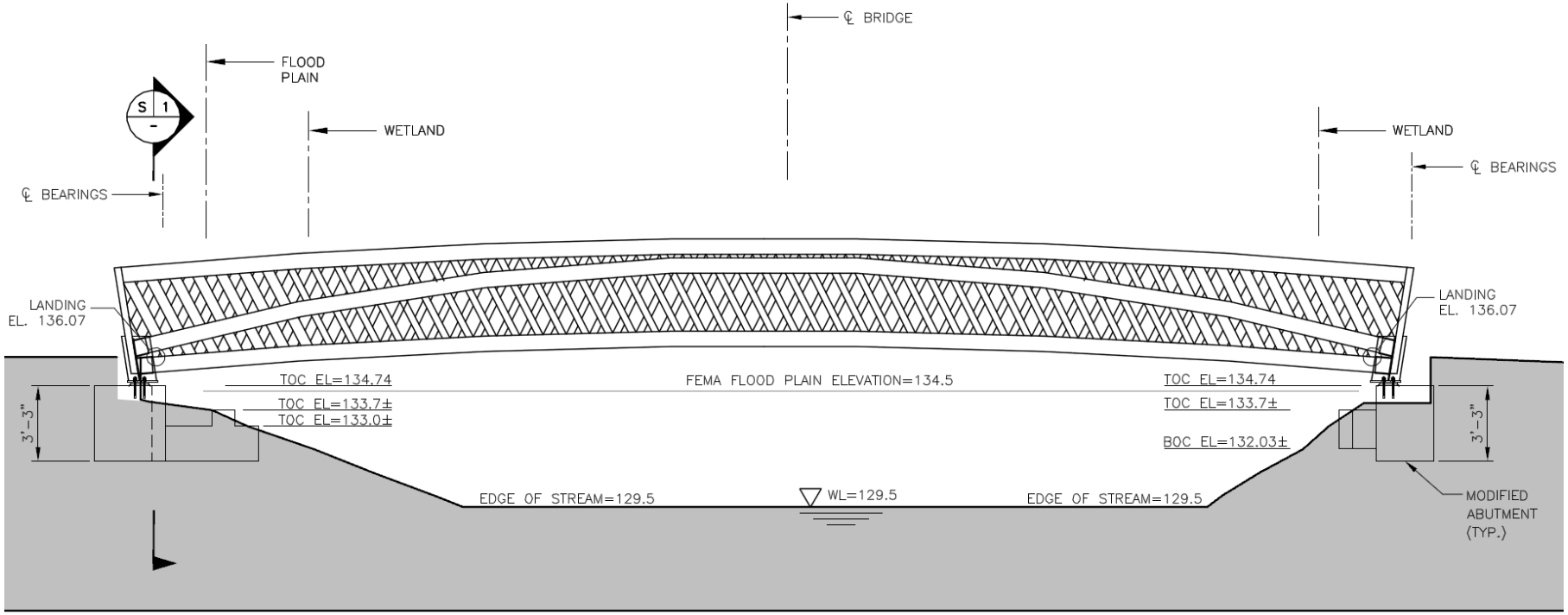

Elevation

-5.6

-3.2

-2.5

-2.0

-1.3

-1.0

Axial force in lattice members (kips)

AASHTO Strength-I Combination

Axial force in chords & arch rib (kips)

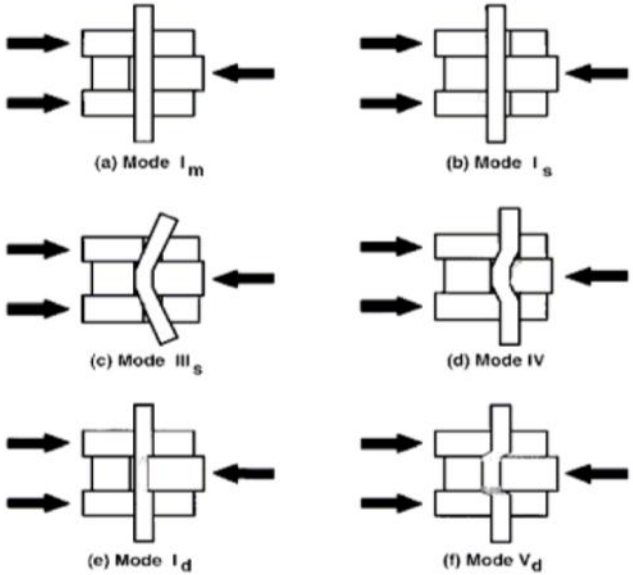

Yield modes of failure for doweled connections

(Timber Framers Guild)

Mode V (peg shear failure)

(Miller, Schmidt, & Bulleit)

TA Footbridge
Peg Shear Diagrams

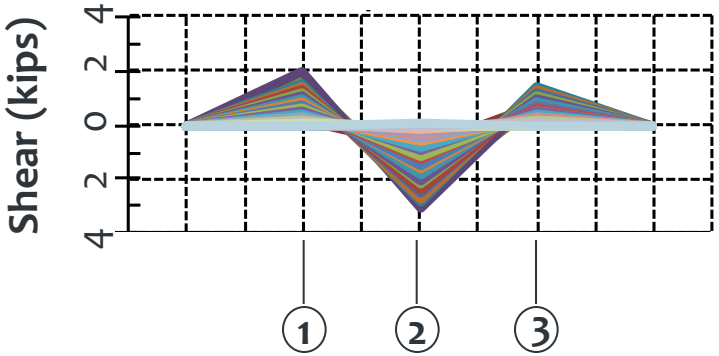

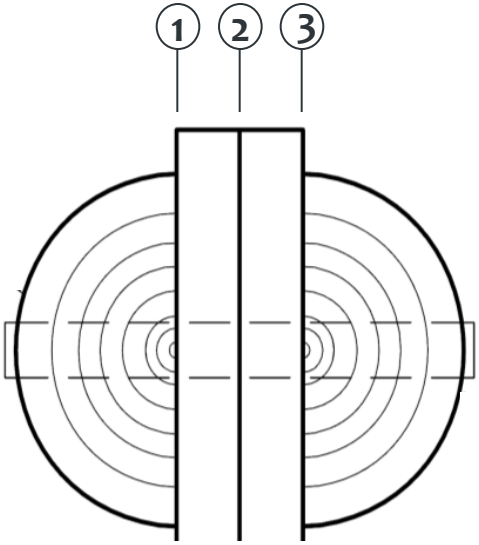

Section – Top Chord

-5.6 -3.2 -2.5 -2.0 -1.3 -1.0

Axial force in lattice members (kips)

AASHTO Strength-I Combination

Axial force in chords & arch rib (kips)

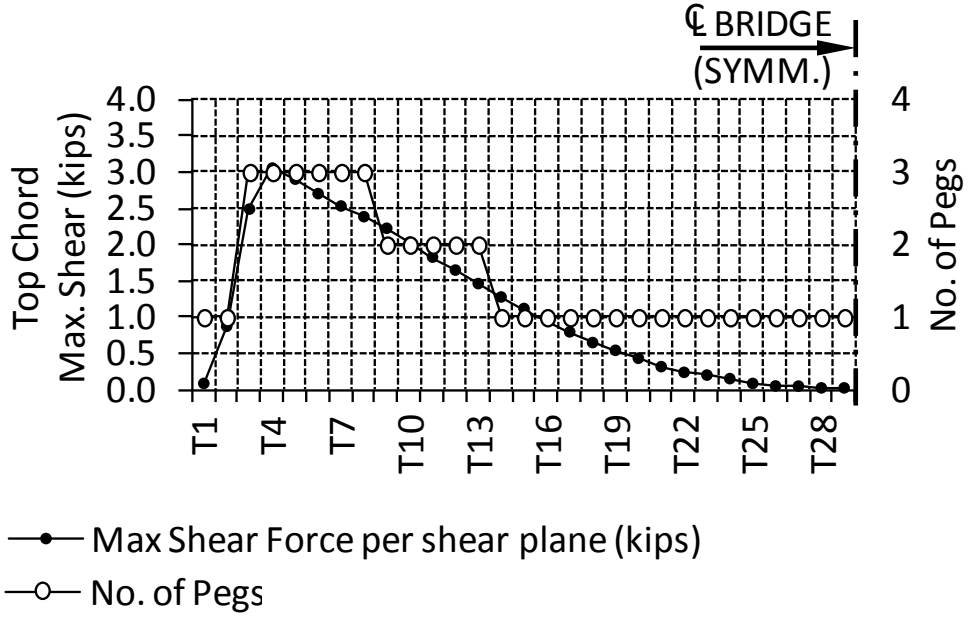

Computed shear force per peg shear plane

Testing Full-Size Members for Squibb Bridge

(Univ. of Maine)

150 mm diameter x 1.83 m logs

(6” dia. x 72”)

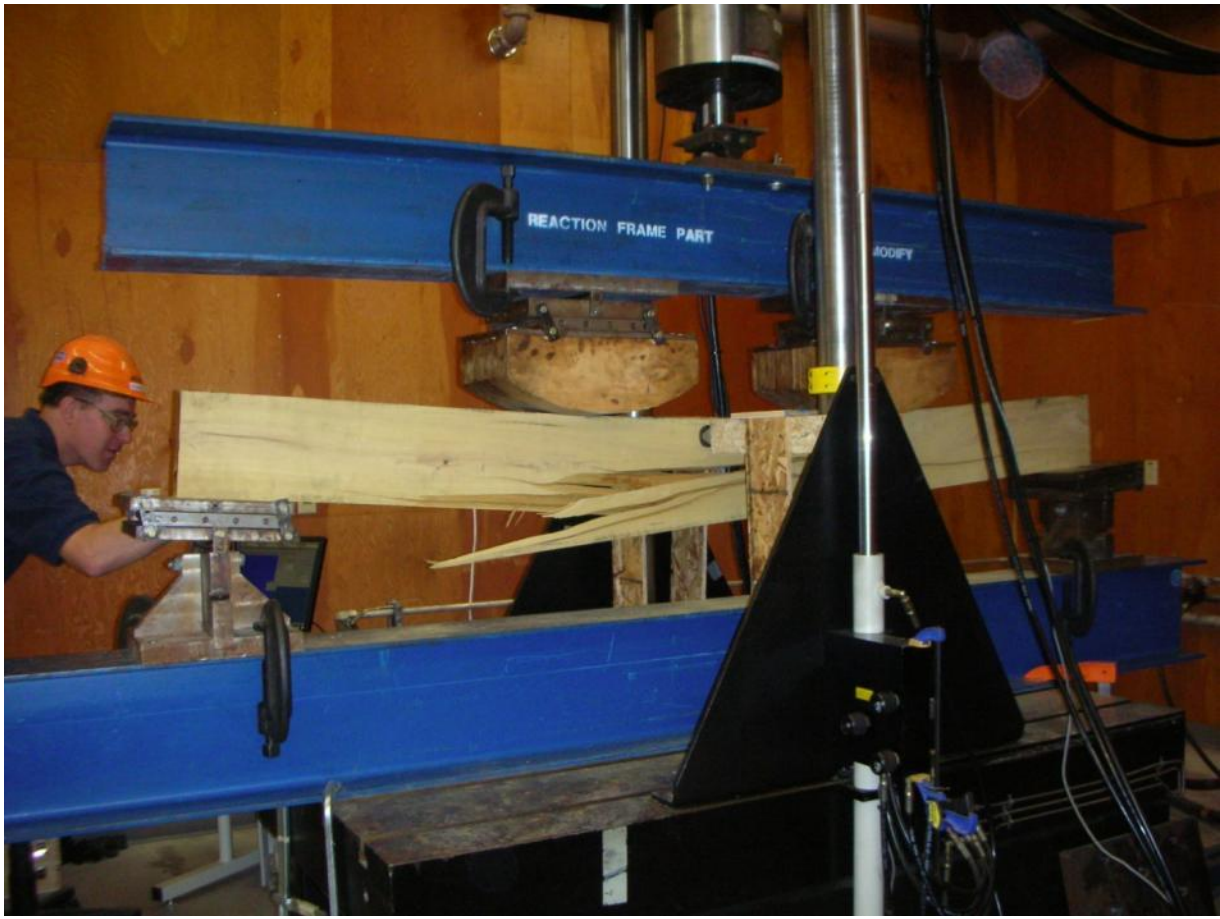

50 mm x 200 mm x 2.49 m beams

(4” x 10½” x 98”)

Compression Strength: Two rounds of testing

Compression Parallel to Grain	n	Ultimate Compressive Strength			Modulus of Elasticity		Moisture Content		Specific Gravity	
		Mean (ksi)	COV (%)	PTL	Mean (ksi)	COV (%)	MC (%)	COV (%)	Mean	COV (%)
FPL White Oak	20	3,560	18	2,321 *	1,250	22	Grn	-	0.60	10
FPL Black Locust	20	6,800	18	4,434 *	1,850	22	Grn	-	0.66	10
Squibb Bridge	45	5,219	12.2	4,051 *	1,770	16.2	24.8	17.0	0.61	4.1
TA Foot bridge	41	7,156	20.8	4,424 *	1,327	49.5	-	-	-	-

*** PTL = lower 5% at 75% confidence**

(ASTM D2915)

Compression Strength: Two rounds of testing

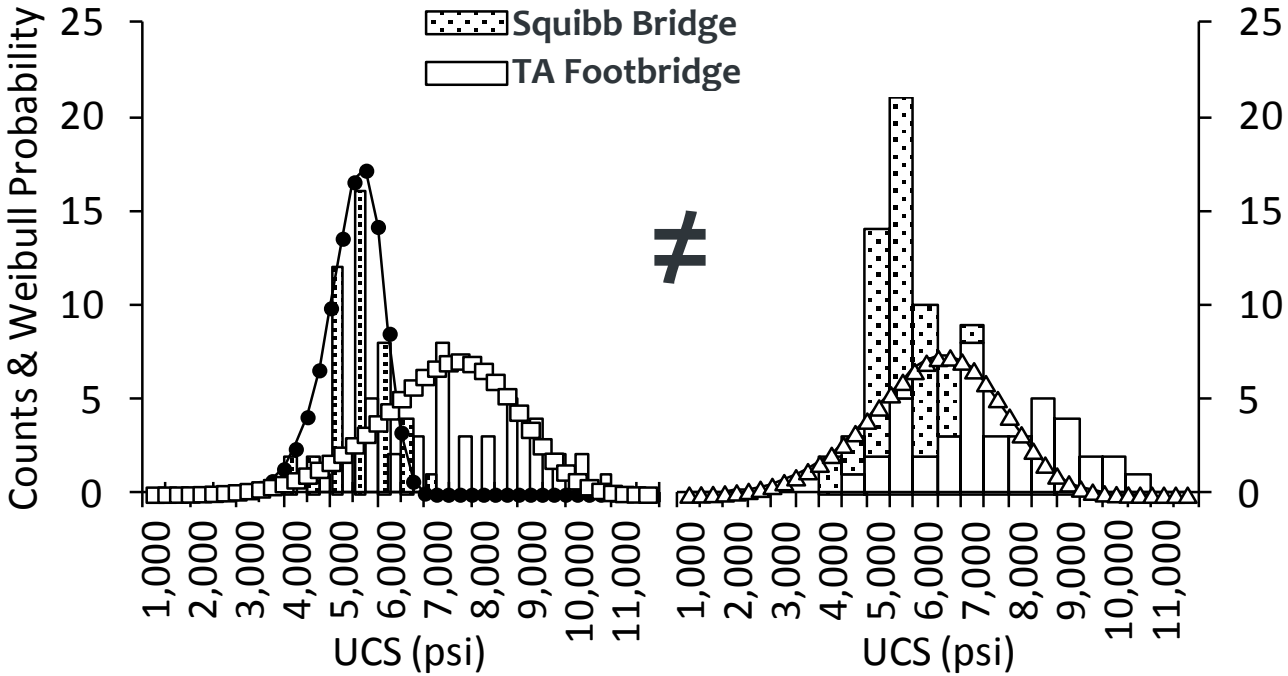

Use caution drawing comparisons.

It may not be reasonable to combine the data sets.