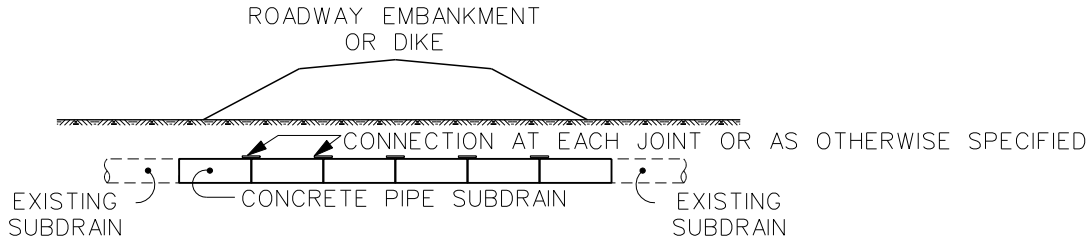

TYPICAL INSTALLATION
WRAPPED PIPE JOINT
(SEALED JOINT NOT REQUIRED)

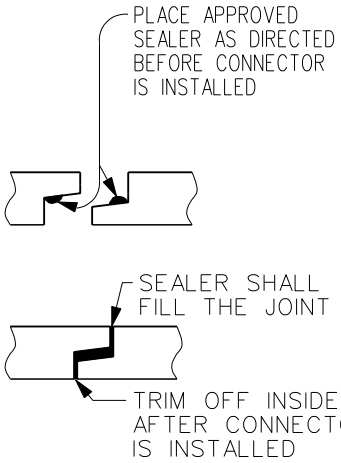

DETAILS OF SEALED JOINT
(TYPE 2 CONNECTION ONLY)

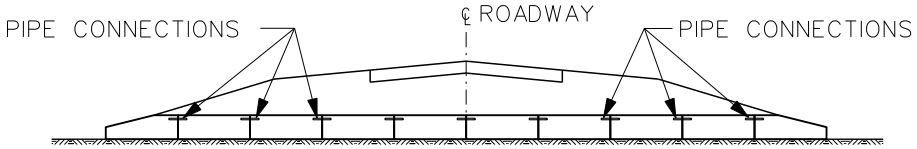

TYPICAL INSTALLATION
NEW CONSTRUCTION

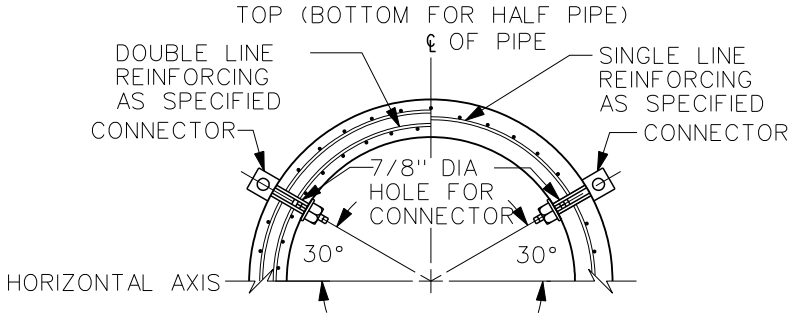

TYPICAL SECTION
PIPE CONNECTION

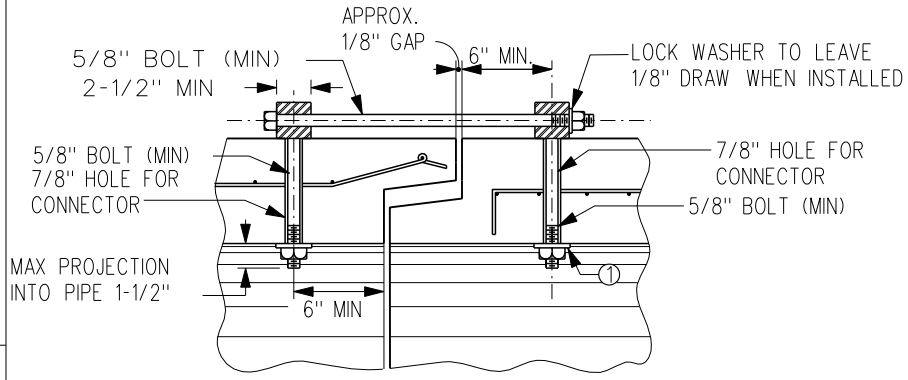

(CONCRETE PIPE TO CONCRETE PIPE)

SECTION OF TYPICAL PIPE CONNECTOR

THE PIPE CONNECTION SHALL BE INSTALLED AS SHOWN WITH TWO (2) CONNECTORS NEAR THE TOP OF THE PIPE SECTION. ALL JOINTS SHALL BE SEALED UNLESS A WRAPPED PIPE JOINT IS SPECIFIED. THE SEAL SHALL BE OF A TYPE THAT MEETS THE REQUIREMENTS OF SECTION 4020, 3.04

(1) 1-3/4" DIAMETER X 9/64" THICK WASHER OR 3" X 3" X 1/4" SQUARE PLATE (SHAPED TO PIPE RADIUS).

PIPE CONNECTION DETAILS (CULVERT)

SHEET 1 OF 1