SUDAS Revision Submittal Form

Status Date:	As of 8/16/2018	**Topic:**	Linear trench drain
Manual:	Specifications	**Manual Location:**	Section 4020, 1.08, 2.02, and 3.04 Figure 6010.521

Requested Revision:

1.08 Measurement and Payment

C. Linear Trench Drain:

1. Measurement: Measurement will be in linear feet from end to end.

2. Payment: Payment will be at the unit price per linear feet of linear trench drain installed.

3. Includes: Price includes, but is not limited to, furnishing and installing the linear trench drain including all appurtenances; furnishing and placement of PCC transition; furnishing, excavation, and backfill of discharge pipe; connection to manhole or intake, if required; installation of apron, if required.

{Renumber the items that follow}

….

2.02 LINEAR TRENCH DRAIN

Comply with approved manufacturer's requirements and Iowa DOT Materials I.M. XXX.XXX, as well as in generally complying with Figure 4020.521. Provide certification indicating continuous trench drain meets AASHTO M 306 for 40,000 pound proof load.

{Renumber the item that follows}

….

3.04 LINEAR TRENCH DRAIN

A. Install according to the manufacturer's requirements and the contract documents.

B. Use duct tape or wood block to prevent intrusion of concrete during installation and paving.

C. Connect to existing intake or manhole according to Section 6010, 3.05.

{Renumber the items that follow}

Reason for Revision: Added linear trench drain option.

Comments: Will be added to the Iowa DOT Specifications as well.

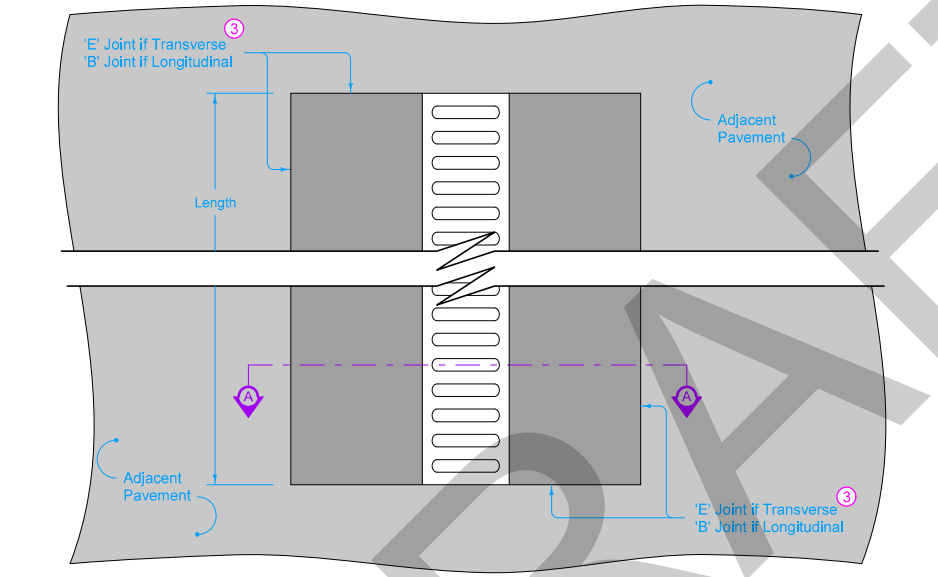

PLAN

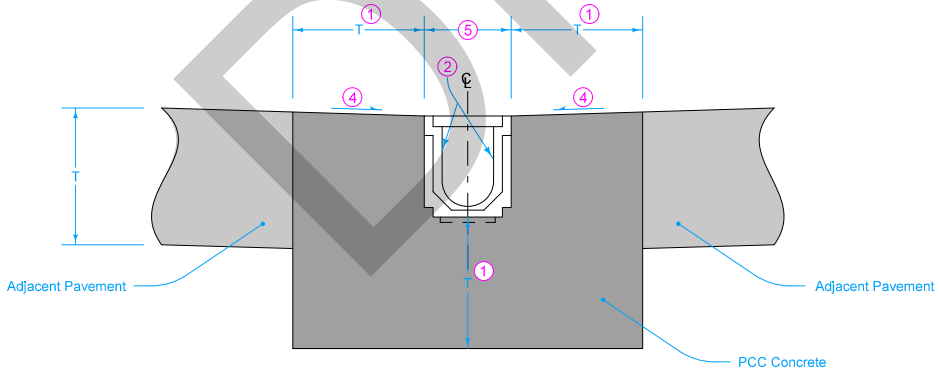

SECTION A-A

1. Same as thickness of adjacent pavement.
2. Linear Trench Drain.
3. For joint details, see PV-101.
4. Slope same as adjacent pavement.
5. Width as determined by manufacturer.

Possible Contract Item:
Linear Trench Drain

Possible Tabulation:
104-14

SUDAS	IOWADOT	REVISION
		New 04-16-19
FIGURE 6010.521	STANDARD ROAD PLAN	SW-521
		SHEET 1 of 1

REVISIONS: New.

Paul D. Wigand
SUDAS DIRECTOR

Brian Smith
DESIGN METHODS ENGINEER

LINEAR TRENCH DRAIN

FIGURE 6010.521 | SHEET 1 OF 1

DRAFT