Modified Sheet Pile Abutment for Low-Volume Road Bridge

Ryan R. Evans
Department of Civil, Construction, and Environmental Engineering
Iowa State University
176 Town Engineering
Ames, IA 50011
ryevans@iastate.edu

David J. White
Earthworks Engineering Research Center
Iowa State University
2711 S. Loop Drive, Suite 4700
Ames, IA 50010
djwhite@iastate.edu

F. Wayne Klaiber
Bridge Engineering Center
Iowa State University
2711 S. Loop Drive, Suite 4700
Ames, IA 50010
klaiber@iastate.edu

Terry Wipf
Bridge Engineering Center
Iowa State University
2711 S. Loop Drive, Suite 4700
Ames, IA 50010
tjwipf@iastate.edu

Caleb Douglas
Earthworks Engineering Research Center
Iowa State University
2711 S. Loop Drive, Suite 4700
Ames, IA 50010
calebd@iastate.edu

ABSTRACT

Steel sheet piling, typically used for retaining structures in the United States, is a potential alternative for use as the primary component in low-volume road (LVR) bridge substructures. To investigate the viability of sheet pile abutments, a demonstration project was performed in Black Hawk County, Iowa. The project involved construction of a 40 ft single-span bridge utilizing axially loaded steel sheet piling as the primary foundation component. The site selected for the project had primarily silty clays underlain by shallow bedrock into which the sheet piling was driven. An instrumentation system (consisting of strain gages, deflection transducers, earth pressure cells, and piezometers) was installed on the bridge for obtaining service load test data as well as long-term performance data. This paper presents documentation of the design and construction of the demonstration bridge in Black Hawk County as well as an analysis of the design procedures used through information collected during load testing. Preliminary results indicate that steel sheet piling is an effective alternative for LVR substructures, and future demonstration projects are planned to investigate different sheet pile abutment alternatives for varying site conditions.

Key words: abutments—bridge—foundations—pile—sheet

INTRODUCTION

Based on National Bridge Inventory data, 22% of the low-volume road (LVR) bridges in Iowa are structurally deficient, while 5% of them are functionally obsolete (Federal Highway Administration 2008). The substructure components (abutment and foundation elements) are known to be contributing factors for some of these poor ratings. In addition to timber piling, steel H-piling, and reinforced or prestressed concrete piling, steel sheet piling has been identified as a viable long-term option for LVR bridge substructures but needs investigation with regard to vertical and lateral load resistance, construction methods, design methodology, and long-term performance.

Iowa Highway Research Board project TR-568 was initiated in January 2007 to investigate the use of sheet pile abutments. A total of 14 different candidate sites were investigated in several counties. Three sites were selected based on site conditions for demonstration projects and are located in Black Hawk, Boone, and Tama Counties. Each of the demonstration projects utilizes a different experimental abutment system. This paper presents a case history of the demonstration project in Black Hawk County (BHC), which was completed in October 2008. The remaining demonstration projects are to be constructed, instrumented, and tested in the summer of 2009.

PROJECT DETAILS

The demonstration project in BHC was constructed at a site crossing a small creek on Bryan Road near La Porte City. This project was constructed to investigate the feasibility of axially loaded sheet piling for use as the primary foundation element for the bridge structure. The replacement bridge was completed by the end of October 2008. In coordination with the Iowa Department of Transportation, a load test of the bridge was subsequently performed using loaded trucks and data were collected and analyzed by Iowa State University (ISU). The following sections give an overview of the previous structure and the replacement bridge.

Old Bridge Structure

The structure that was replaced was a 40 ft single-span pony truss bridge supported on a timber pile foundation (see Figure 1). The bridge was approximately 10 ft above stream level. The structure was retrofitted at some point with steel H-piles, one per abutment. These retrofit piles are believed to have been driven into the existing shallow bedrock (about 8 ft below stream level) to provide reinforcement for the timber abutments; one of these piles can be seen in Figure 1.

Figure 1. Previous bridge in BHC with retrofit pile shown

Replacement Bridge Overview

The replacement bridge (a two-lane 40 ft single-span beam-in-slab bridge) was a joint design effort between BHC and ISU. The design of the superstructure was performed by the BHC engineering department and utilized precast elements previously developed. The substructure, which was primarily designed by ISU, utilized axially loaded sheet piling as the bearing component of the foundation.

Superstructure

BHC used custom precast beam-in-slab units for the bridge superstructure. Each unit contained two W14x61steel beams. A total of six units were required for the bridge, each unit spanning the entire length. Between each unit there was a cast-in-place joint that was poured after the units were placed. Figure 2 shows a profile of the bridge deck and abutment.

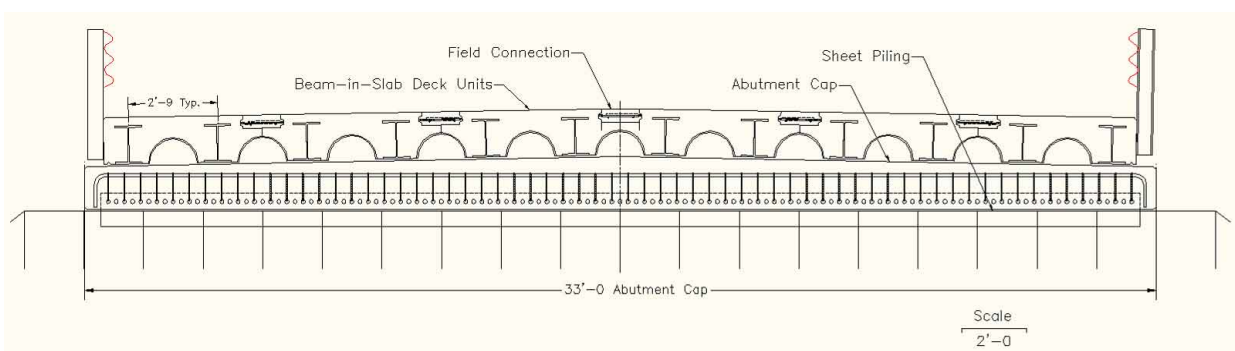

Figure 2. Cross section of replacement bridge deck

Substructure

Steel sheet piling was used for the foundation of the bridge structure. Each abutment consisted of a precast abutment cap bearing on sheet pile sections driven into shallow bedrock. A total of 64 PZ-22 sheet pile sections were required in each abutment.

The abutment cap was a precast element designed by BHC that consisted of a W12x65 steel beam cast in reinforced concrete. The web of the steel beam cast in the abutment cap beared directly on top of the driven sheet piling with no attachment between them. The bridge deck units were placed on the abutment cap using bearing pads between the deck units and the reinforced concrete abutment cap. Figure 3 shows a cross section of the sheet pile abutment.

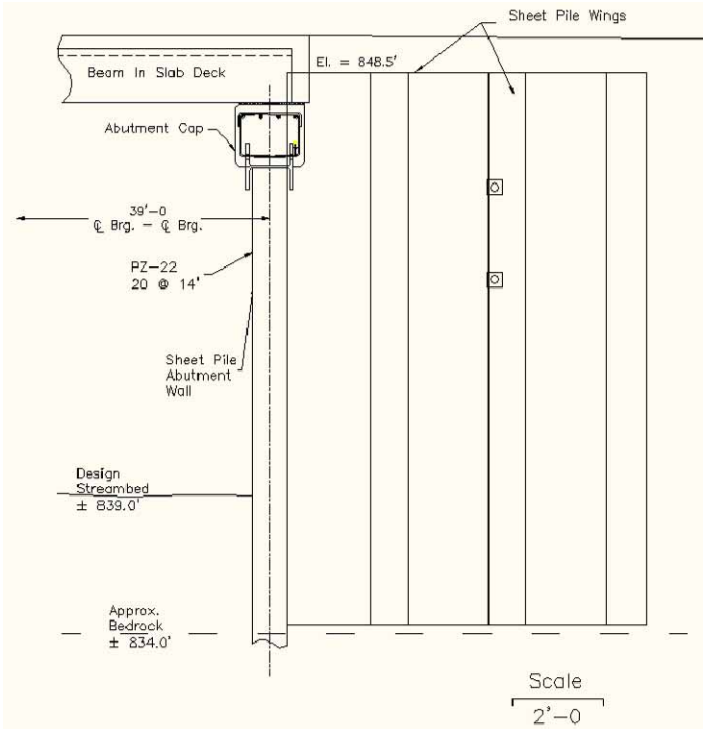

Figure 3. Cross-section of sheet pile abutment

SITE INVESTIGATION

Before designing the abutments, a subsurface investigation was performed that involved cone penetrometer testing (CPT) as well as laboratory analysis of soil borings. CPTs were performed at each abutment and provided subsurface profiles (see Figure 4) that showed predominately clay with sand seams and bedrock at approximately 15 ft and 17 ft depths for the east and west abutments, respectively. The soil borings (also performed at each abutment) involved drilling and sampling of the soil at various depths for analysis of strength and other characteristics.

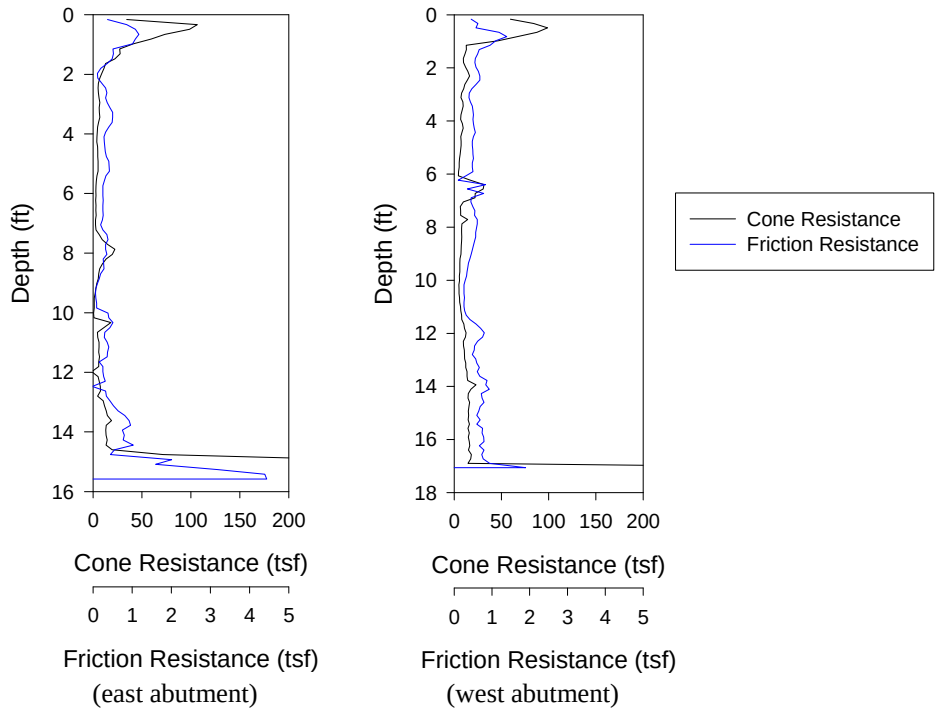

Figure 4. CPT results for BHC bridge site

DESIGN AND CONSTRUCTION

Design of Abutments

The design of the substructure was performed according to the American Association of State Highway and Transportation Officials (AASHTO) Load and Resistance Factor (LRFD) Bridge Design Specification (1998). Substructure elements were designed to resist HL-93 loading. The 40 ft bridge was loaded with the design truck and lane load as per AASHTO (1998) Section 3.6.1.2 in order to determine live loads that needed to be resisted by the abutment. The design loads were determined using the critical load factors and load combinations in AASHTO (1998) Section 3.4. Although unused in this design (due to the presence of shallow bedrock), the Steel Construction Institute (1998) provides a design methodology for axially loaded sheet pile abutments that derive their bearing capacity through soil friction. Further design considerations for sheet piling are outlined by the American Society of Civil Engineers (1996).

Sheet Pile Wall Design

Due to the nature of the loading, the sheet pile sections were analyzed as beam columns. The combination of piling being driven into bedrock and restraint provided by wing walls was assumed to prevent translation at the base of the wall (but not rotation). Once in place, the bridge superstructure was assumed to provide restraint against translation at the top of the wall, and thus, the design element was assumed to be simply supported at both ends of the section.

Loads from the retained soil and surcharge were applied laterally to the element. For determining the transfer of vertical pressure to the wall, at-rest conditions were assumed due to the effect of the bridge structure in resisting lateral displacement at the top of the wall. The design parameters used for the

backfill soil were a friction angle of 30˚, cohesion of 0 psf, and a unit weight of 125 pcf. For the underlying clay layer, the parameters used were a friction angle of 0˚, cohesion of 500 psf, and a saturated unit weight of 140 pcf.

Vehicular live loads on the retained soil were accounted for in design by using the equivalent surcharge loading outlined in AASHTO (1998) Section 3.11.6.2. Design axial loads in the piling were determined by assuming superstructure dead loads were distributed evenly amongst all piles and live loads were distributed over a 10 ft wide lane. As previously stated, the pile section required for the wall was the PZ-22.

The final design of the abutments required a total of 64 (32 per abutment), 15 ft PZ-22 piles (Grade 50 steel). Based on a market price of $20.80 per square foot of wall, the total cost of the sheet piling was approximately $36,600. The abutment caps were set directly on the top of the sheet pile wall after it was finished to grade. As stated previously, the superstructure was assumed to provide adequate lateral restraint once in place. During backfilling of the abutments, however, this was not the case. Because of the lack of lateral restraint, a reinforced concrete deadman anchor system was installed on each abutment. The system was designed by BHC and consists of a reinforced concrete deadman (approximately 8 x 3 x 2 ft) with two, 1 in. diameter tie rods connected to a waler channel on the exterior face of the abutment walls.

Construction of the Bridge

BHC used its own crew for construction of the entire project. The bridge crew consisted primarily of three construction workers employed each day that work was being done on the project. According to the BHC engineer, average labor costs amount to approximately $1,000 each day the bridge crew is on-site.

The total time required for construction of the replacement bridge was approximately 10 weeks. The demolition of the existing bridge structure, which was considered the beginning of project construction, began in the fall of 2008. A chronology of major construction events is shown in Table 1.

Table 1. Chronology of significant construction events for BHC project

Event Description	Start Date
Demolition	08/13/08
Sheet pile driving—East Abt.	08/25/08
Sheet pile driving—West Abt.	09/02/08
Abutment finishing	09/17/08
Deck unit placement	10/02/08
Bridge finishing	10/15/08
Open for service	10/20/08

Sheet Pile Driving

After demolition of the majority of the existing structure was completed, pile driving of the sheet pile walls was performed. For the main abutment sheet pile walls, pile driving was completed using both vibratory and impact hammers. The piles, after being placed in a guide rack to help ensure proper wall construction, were initially driven as far as possible by using an excavator equipped with a vibratory plate. The piles were then driven to a 25 ton bearing using a crane equipped with a drop hammer. Bearing

was considered to be attained if after five consecutive blows (from a 4,250 lb. hammer dropped from six ft), less than two in. of penetration was observed. Wing walls were driven as deep as possible with the vibratory plate and then trimmed. The wing walls were placed at a 45˚ angle to the main wall using a custom connector.

The guide rack was built to have an opening that was one in. wider than the width of the sheet pile sections used in order to ensure the sheet piles would fit. This was unnecessary as a slightly rotated sheet pile section would be able to fit easily into a guide rack built to exact sheet pile width. A rack of exact width would also have ensured that adjacent piles would be flush with each other. Significant rotation between adjacent sheets occurred. This rotation resulted in extending the actual width of the wall by approximately 1 1/2 ft.

CPT results showed refusal at 15 ft below grade for the east abutment. During impact driving, practical refusal (the 25 ton bearing) was not reached until significantly below what was shown in the CPT results. This was not an issue for the east abutment since pile lengths ordered were longer than necessary.

CPT results for the west abutment showed refusal at approximately 17 ft below grade. During the impact driving phase, it became evident that the piling lengths ordered were too short. The depth required for practical refusal on the west side of the stream was significantly lower than that predicted by the CPT results. All of the sheet piles along the main wall required splices to be added in order to achieve design elevations. In some cases, piles needed to be driven more than a foot lower than the adjacent section; this required splices to be made as well in order for the pile driving mechanism to fit in place.

Another issue encountered was fracturing of the pile driving cap. The BHC bridge crew had constructed a custom cap for driving of the sheet piles out of welded plates. After a few hammer blows, the welds would fracture and typically require the remainder of the work day to be redone. This occurred two separate times during construction of the west abutment wall.

Abutment Construction

After all sheet piling had been driven to specified bearing capacity, several tasks were performed to complete the abutments. The major tasks that needed to be performed before backfilling were placement of the subdrain, installation of the anchor system, placement of the abutment cap, and installation of instrumentation.

Before each abutment was backfilled, a layer of rip-rap was placed against the stream side face of the sheet pile walls. Both abutments were backfilled with ¾ in. roadstone within a short zone behind the sheet pile wall (shown in Figure 5a). Outside of these zones, existing material was left in place. On the east abutment, the existing material that was left consisted primarily of soil. On the west abutment, the majority of the abutment from the previous bridge was left in place. Backfill material was primarily used to fill the void between the sheet pile wall and the abutment from the previous bridge. The remainder of construction required placement of guardrails and finished grading of the roadway approaching the bridge. The bridge was opened for service on October 20, 2008. A view of the west abutment of the bridge after completion is shown in Figure 5b.

(a) **(b)**

Figure 5. (a) Backfilling of west abutment with abutment cap in place, (b) west abutment of completed bridge in BHC

LOAD TESTING

The bridge was instrumented with vibrating wire instruments as well as strain and displacement transducers. The vibrating wire instruments (strain gages, earth pressure cells, and piezometers) were permanently installed at the site and were used for long-term data recording. The strain and displacement transducers were installed for the one-time service load test of the structure.

Instrumentation Installation

Although strain gages were attached to the sheet pile sections before driving, earth pressure cells and tie rod strain gages needed to be installed both before and during the backfilling operations. Tie rod strain gages were attached to each tie rod and protected by welding angle iron sections around them. Earth pressure cells were placed at various depths along the abutment wall and required backfilling operations to be halted several times for placement. For placement of each earth pressure cell, a small trench was made in which the cell was placed and surrounded by fine silica sand and compacted.

Two piezometers were installed on the project to monitor the height of the water table. The instruments were placed at the centerline of the west abutment on opposite sides of the sheet piling (one on the backfill side and one on the stream side).

Bridge Load Testing

The instrumentation and monitoring system was used in conjunction with load tests to investigate the behavior of the structure under loading. The live load test involved driving loaded trucks over the bridge and taking readings when they were in predetermined locations. Axle loads of the test trucks are given in Table 2.

Table 2. Truck axle weights

Load	Truck #48 (lbs)	Truck #38 (lbs)
Front axle	17,460	16,980
Tandem axle	31,360	30,260
Total	48,820	47,240

Due to the unexpectedly high post-construction stress readings in the tie rods on the west abutment, it was decided that a test be performed on the south tie rod to verify the accuracy of the readings. The process of this test was to loosen the tie rod hex nut at specific intervals, taking readings of tie rod stress after each interval.

RESULTS AND ANALYSIS

In order to analyze the results of the bridge testing, expected stresses and deflections were estimated by using design analysis. The bridge test results were compared for the test run of Truck #48 in the south lane of the bridge for the case of the tandem axle load positioned 5 ft from the centerline of the sheet pile wall (putting the front axle load on the bridge). The expected and actual values for various load types are presented in Table 3. The total values are given as well as the values due to the live load test only. For the theoretical analysis, truck loads were assumed to distribute over a 10 ft width of the bridge. For the earth pressure cells listed, their locations are given relative to the top of the abutment cap (TOC).

Table 3. Comparison of actual to expected values for various bridge test results

Load or deflection	Expected		Measured	
	Total	Live load only	Total	Live load only
Pile axial stress	0.8 ksi	0.2 ksi	1.9 ksi	0.04 ksi
Pile flex. stress	9.1 ksi	-	8.7 ksi	-
Earth pressure (1' below TOC)	440 psf	330 psf	35 psf	10 psf
Earth pressure (3' below TOC)	500 psf	270 psf	27 psf	0 psf
Midspan flex. stress	-	2.2 ksi	-	1.3 ksi
Midspan defl.	-	0.2 in	-	0 in
Wall defl.	-	0.2 in	-	0 in

From the results in Table 3 it can be seen that earth pressures were significantly lower than estimated. Although more pressure cells were used for the test (all measuring unexpectedly low earth pressures), the cell one ft below the abutment cap showed the highest variation in stress during the live load test (a magnitude of 10 psf). The theoretical and measured loads were compared for the south tie rod as well and the results are given in Table 4. By analysis, the load test truck was expected to yield the tie rods (a stress of 50 ksi). The tie rods, however, were only intended for lateral resistance during abutment construction. Once in place, it was assumed that lateral restraint of the top of the wall would be provided by the superstructure.

Table 4. Comparison of tie rod stress results during construction and testing

	Stress (ksi)		
		Measured	
South tie rod	**Expected**	**During construction**	**During load test**
	50	45	0.5

As can be seen from the live load test results, a negligable amount of stress is developed in the tie rods from the truck loads. Coupled with the minimal wall displacements measured, the assumption of lateral restraint provided by the superstructure is considered accurate. After construction of the abutments, however, it was seen that high stresses had occurred during construction. As previously mentioned, a tie rod test was performed to confirm these readings. The conclusions drawn from the tie rod test were the following:

- The tie rod gage readings were reliable, and thus, unexpectedly high stresses were induced in the tie rods during construction of the abutments.
- Since initial readings in the south tie rod indicated stress levels near the yield stress of the steel, it is possible the tie rods experienced yielding at some point during compaction of the abutment backfill and construction of the bridge superstructure.

Long-term measurement of earth pressure (as well as temperature) in the cells one and three ft below TOC are presented in Figures 6 and 7, respectively. Although the monitoring system was destroyed in a flooding event in the spring of 2009, long-term data was recorded for 80 days after November 20, 2008. For the cell one ft below TOC, variations of earth pressure with time were recorded. In the cell just below it (three ft below TOC) the variation was less. Both cells experienced greater variations in stress during cold temperature cycles (perhaps attributed to stress development from ground freezing in the backfill behind the abutment).

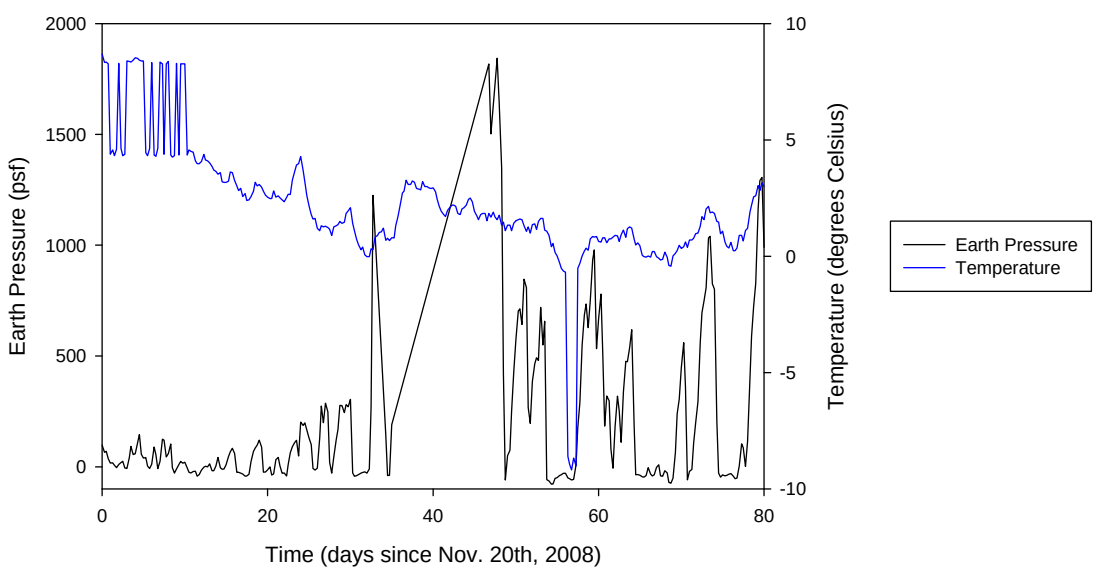

Figure 6. Long-term readings for pressure cell #9489 (located one ft below top of abutment cap)

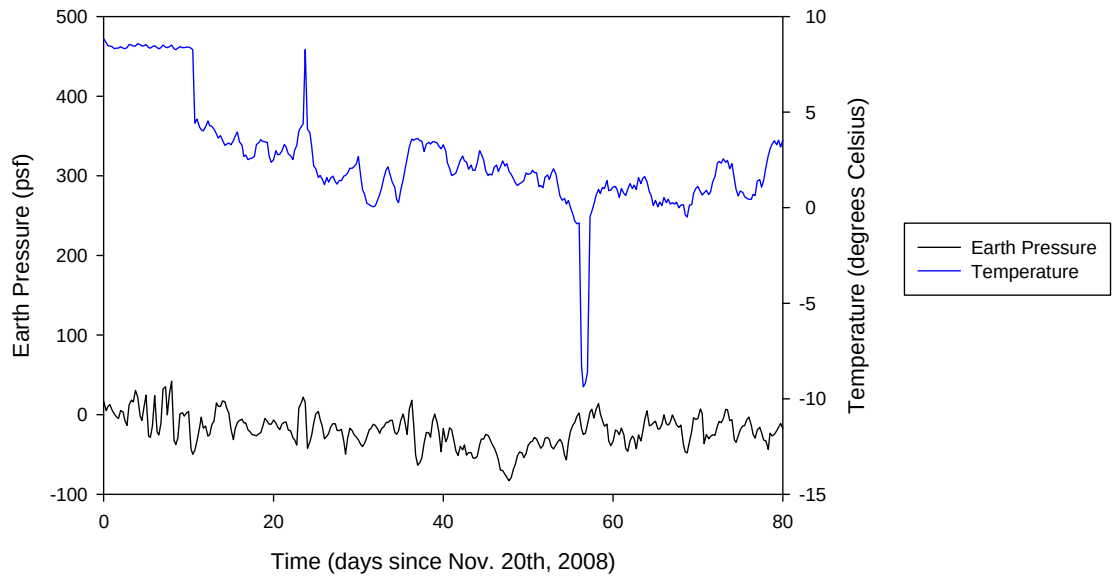

Figure 7. Long-term readings for pressure cell #8503 (located three ft below top of abutment cap)

Long-term groundwater table measurements, given as the distance from the bottom of the bridge deck (at the abutments) to the water level, are shown in Figure 8 for both sides of the abutment. Although the two piezometers measured different levels of groundwater, the offset is constant at about three to four in. (attributable to human error), suggesting that no significant pressure head developed behind the abutment wall.

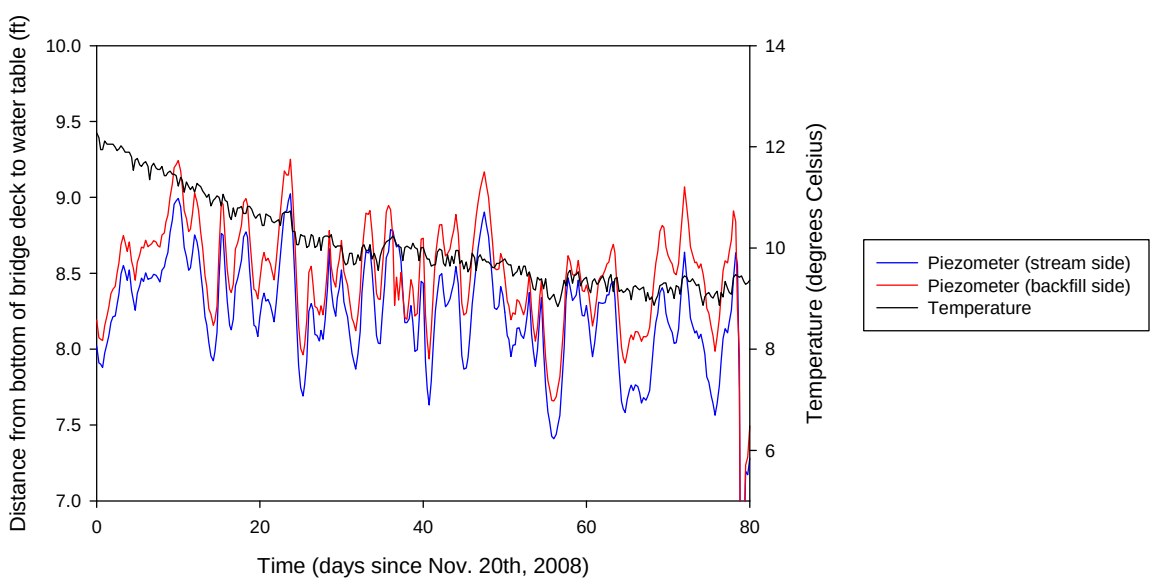

Figure 8. Long-term readings for piezometers (both sides of abutment)

CONCLUSIONS AND RECOMMENDATIONS

Through the construction and structural monitoring of the bridge project, steel sheet piling has been shown to be a feasible alternative for bridge abutments with site conditions similar to BHC. Although the BHC project required approximately 10 weeks for construction, in the future, potential for significant shortening of construction time exists if critical to the project timeline.

Several improvements for the sheet pile abutment system were determined during the project. Although the tie rods were shown to be unnecessary once the bridge is completed, the use of some form of lateral restraint is necessary to resist the loads developed during abutment construction. Tie rods are one alternative and will also provide overall system stability during large lateral loading events that may occur. The use of a forged pile driving cap is another recommendation as significant time and labor was spent repairing the custom-made, welded cap used by BHC.

Although the bridge test results showed significantly lower stresses and deflections than expected, further testing is recommended to determine the nature of earth pressure development behind sheet pile abutments. Two other tests are planned in the summer of 2009 during construction of the other demonstration bridges that are part of project TR-568; results from these tests will provide a more in-depth analysis of earth pressures as well as an investigation into the viability of steel sheet pile abutments for differing site conditions.

ACKNOWLEDGMENTS

This investigation was conducted by the Bridge Engineering Center at Iowa State University. The authors wish to acknowledge the Iowa Department of Transportation, Highway Division, and the Iowa Highway Research Board for the funding to sponsor this research project.

REFERENCES

American Association of State, Highway, and Transportation Officials. (1998). *Load and Resistance Factor Design Bridge Design Specifications.* 2nd ed.

American Society of Civil Engineers. (1996). *Design of Sheet Pile Walls*. Technical Engineering and Design Guides as Adapted from the US Army Corps of Engineers, no. 15.

Federal Highway Administration. (2008). *National Bridge Inventory: Deficient Bridges by State and Highway System.* Office of Bridge Technology. Retrieved June 12th, 2009, from http://www.fhwa.dot.gov/bridge/deficient.cfm

Steel Construction Institute. (1998). *Design Guide for Steel Sheet Pile Bridge Abutments*. United Kingdom.