I-74 Corridor in the Quad Cities

Concrete Applications, Delivery & Placement

2017 Iowa Better Concrete Conference

November 9, 2017

Presented By:
Diane Campione, P.E., S.E., Alfred Benesch and Company

Illinois Department of Transportation

benesch
engineers · scientists · planners

IOWA DOT

OUTLINE

- Overview of I-74 Project
- Concrete Applications (Bridges)
- Concrete Delivery & Placement

I-74 PROJECT OVERVIEW

I-74 Corridor Improvement

- Joint Initiative of Iowa DOT and IL DOT
- Nearly 8 miles long
- Moline, IL to Davenport, Iowa
- Increase capacity
- Improve Travel
- Enhance connecting arterial roadways
- Improved opportunities for pedestrians/cyclists

I-74 PROJECT OVERVIEW

Owners/Key Stakeholders

- Iowa DOT (lead agency)
- Illinois DOT
- Federal Highway Administration
- Bi-State MPO
- Cities of Moline, Bettendorf, Davenport
- Scott and Rock Island Counties
- Benesch Design Team – Final Design
- John Wood Group (AMEC) – GEC
- IL DOT - Resident Engineers/Inspectors (w/assistance from Bruner, Cooper and Zuck Team)

I-74 PROJECT OVERVIEW

Twin Suspension Bridges

- Traffic Congestion
- Safety Concerns
- Obsolete (1935 & 1960)

I-74 PROJECT OVERVIEW

I-74 CORRIDOR MILESTONES	
1998	Mississippi River Crossing Study
2000	I-74 Corridor Study began
2003	Draft Environnemental Impact Statement (EIS)
2005	Preferred Alternative identified
2006	Main Span Bridge Type chosen
2007	Preliminary Engineering completed
2009	Final EIS Approved & Record of Decision Received Benesch Design Team begins Final Design
2017 (6/28)	**Iowa and Illinois Break Ground for New I-74 River Bridge**

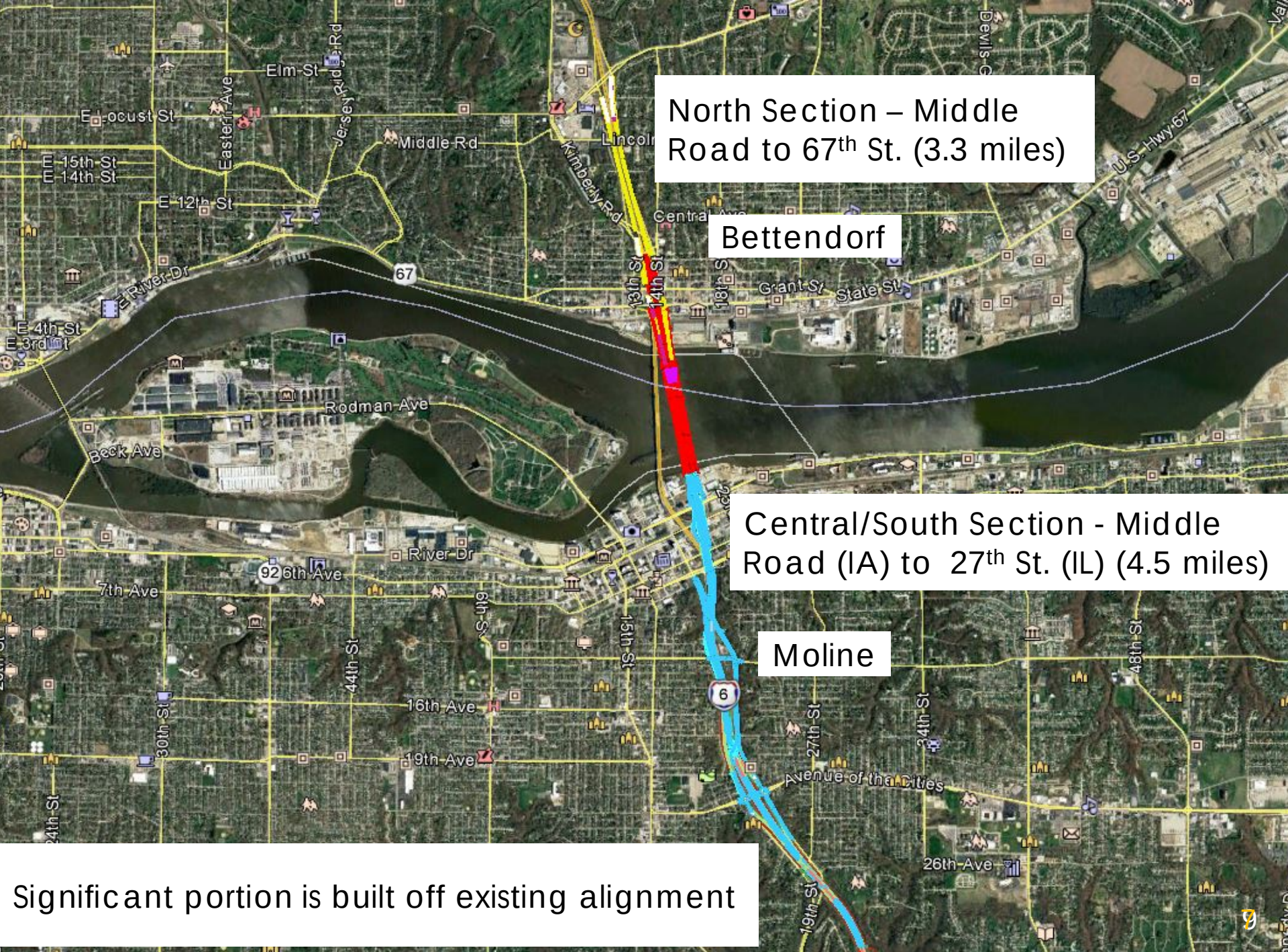
North Section – Middle Road to 67th St. (3.3 miles)
Bettendorf
Central/South Section - Middle Road (IA) to 27th St. (IL) (4.5 miles)
Moline
Significant portion is built off existing alignment
Elm St
E Locust St
Middle Rd
Lincoln
Kimberly Rd
Central Ave
E 15th St
E 14th St
E 12th St
Eastern Ave
Jersey Ridge Rd
E River Dr
67
13th St
14th St
18th St
Grant St
State St
U.S. Hwy 67
E 4th St
E 3rd St
Rodman Ave
Beck Ave
River Dr
92
6th Ave
7th Ave
9th St
15th St
44th St
30th St
16th Ave
19th Ave
6
27th St
34th St
48th St
Avenue of the Cities
26th Ave
19th St
24th St

I-74 PROJECT OVERVIEW

- "Bank-to-bank" is about 3,300 feet
- Plate Girder approach spans north and South of the Main Span
- Shallow water on the Illinois Side
- Clear distances between existing and proposed structure
  - 60' at north (Iowa) end
  - 600' at south (Illinois) end

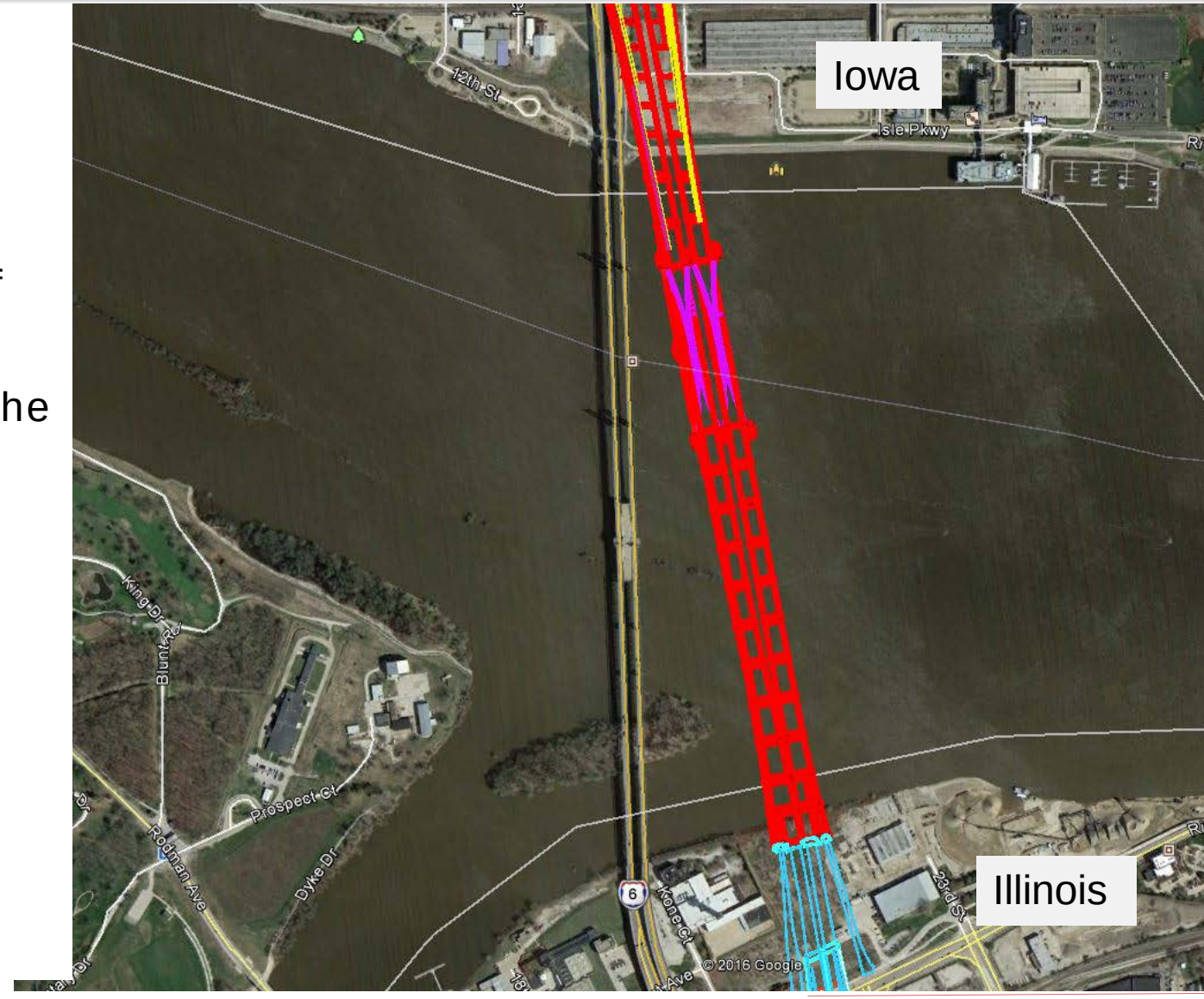

I-74 PROJECT OVERVIEW

River Crossing: Iconic Focal point for this Region

I-74 PROJECT OVERVIEW

I-74 CORRIDOR FEATURES

- Provides 6 through lanes with additional lanes at select locations
- Replace/reconfigure (6) service interchanges
- Construct new River crossing structures along new alignment east of existing bridge
  - provides for 4 12-ft striped lanes each bridge; with 12 ft. shoulder on each side of both bridges
  - Includes a multi-use path (14 ft. clear width) eastbound bridge with connections to paths in Bettendorf and Moline; with overlook extending 20 ft. from edge of path at midspan of EB truss

I-74 PROJECT OVERVIEW

I-74 CORRIDOR FEATURES

- Corridor-wide improvements include
  - New lighting
  - Intelligent Transportation System (ITS)
  - Landscaping
- Aesthetics features throughout the corridor including aesthetic lighting of the Arch Truss and under-lighting of the River Piers
- Improves local roads (Bettendorf and Moline)

IOWA "LET" PROJECTS

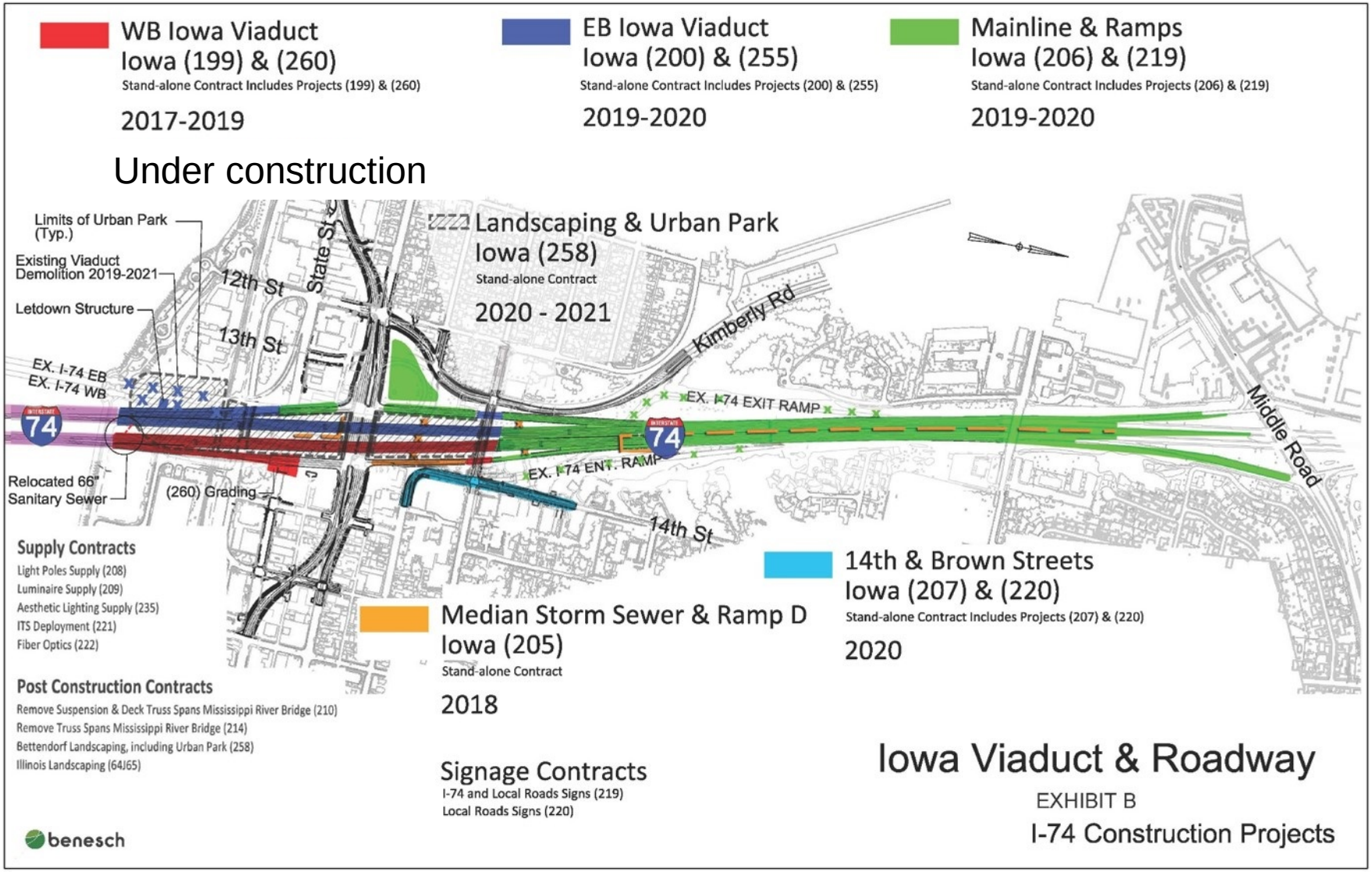

IOWA "LET" PROJECTS

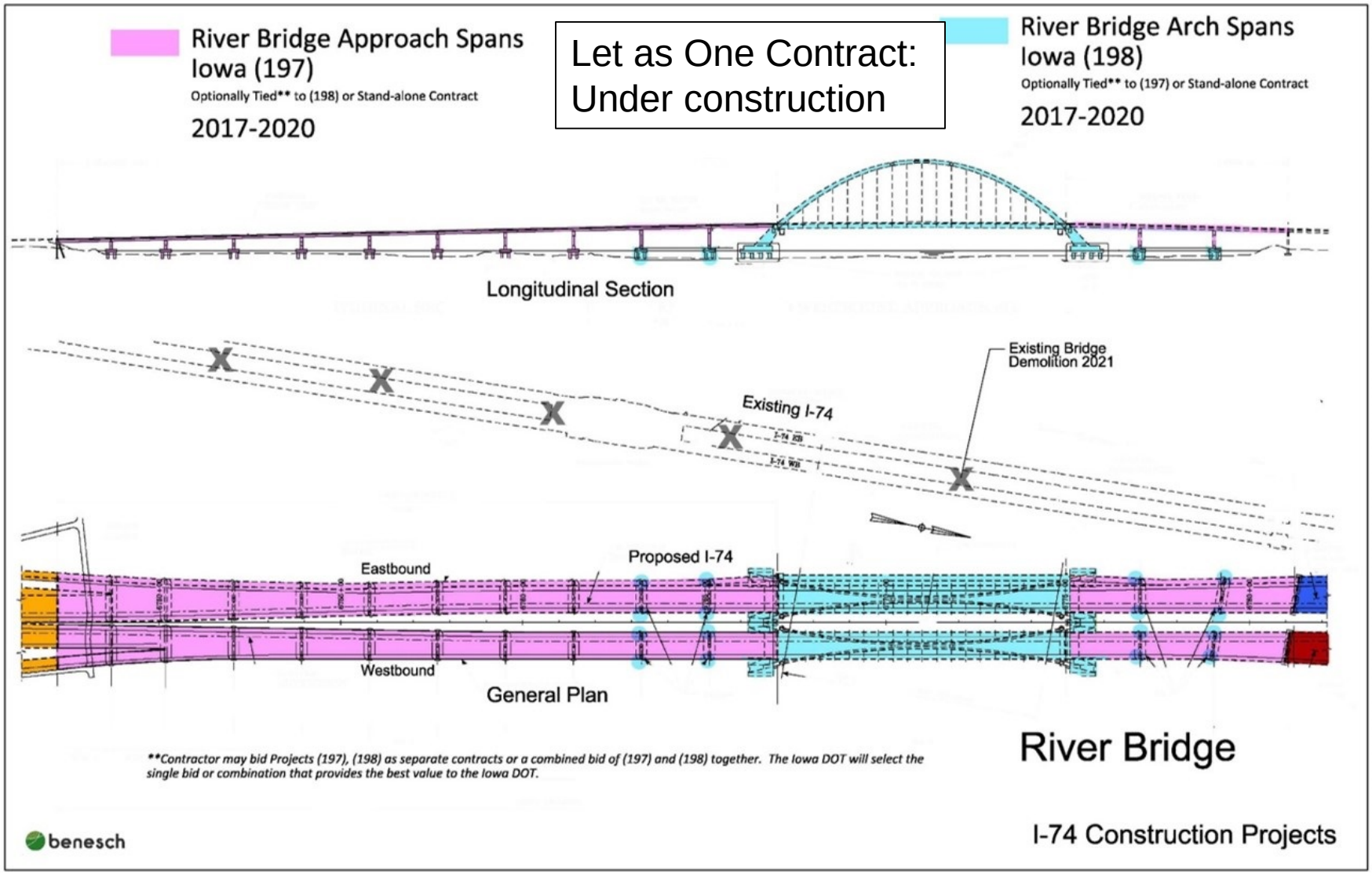

ILLINOIS "LET" CONTRACTS

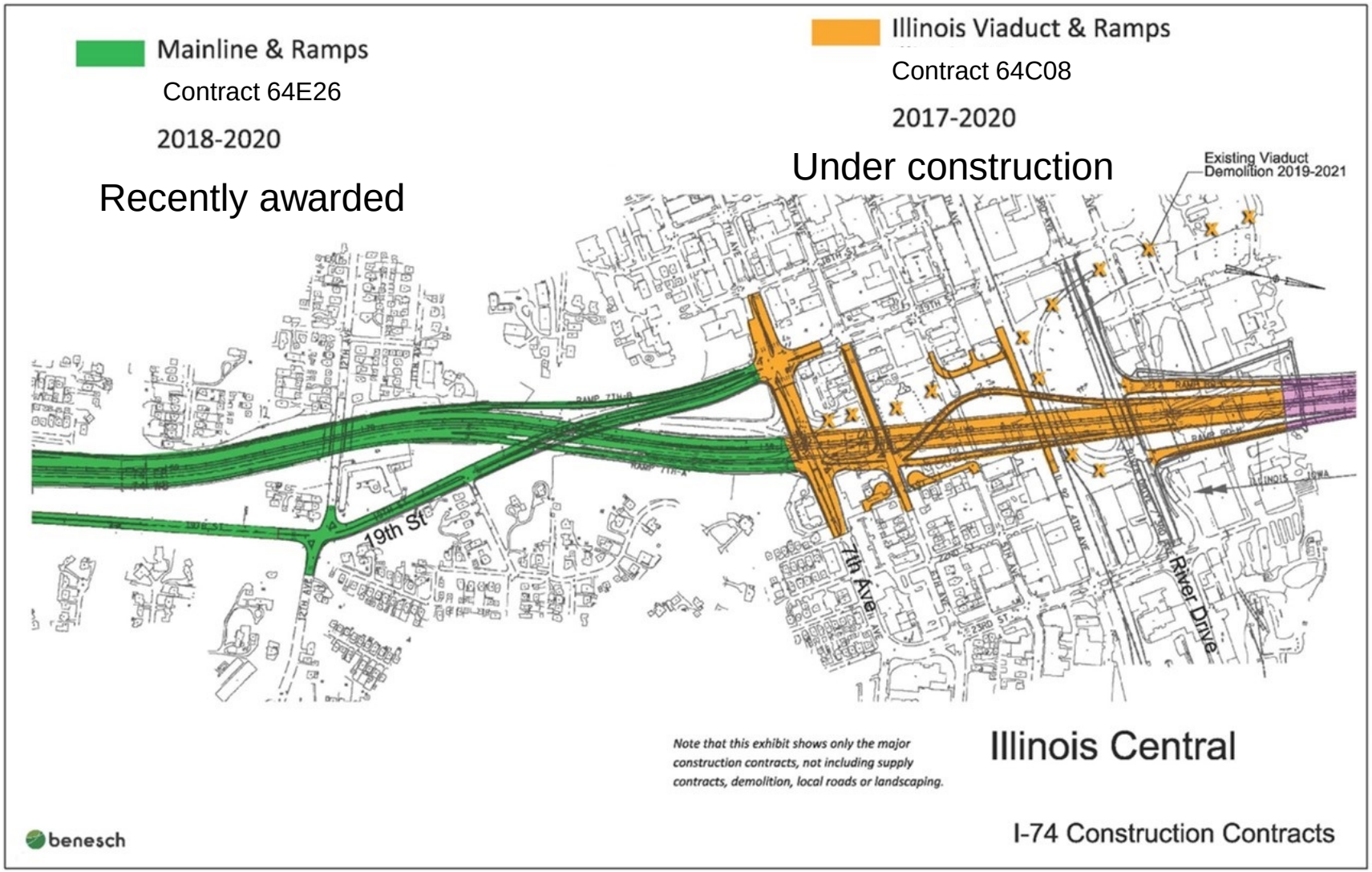

ILLINOIS "LET" CONTRACTS

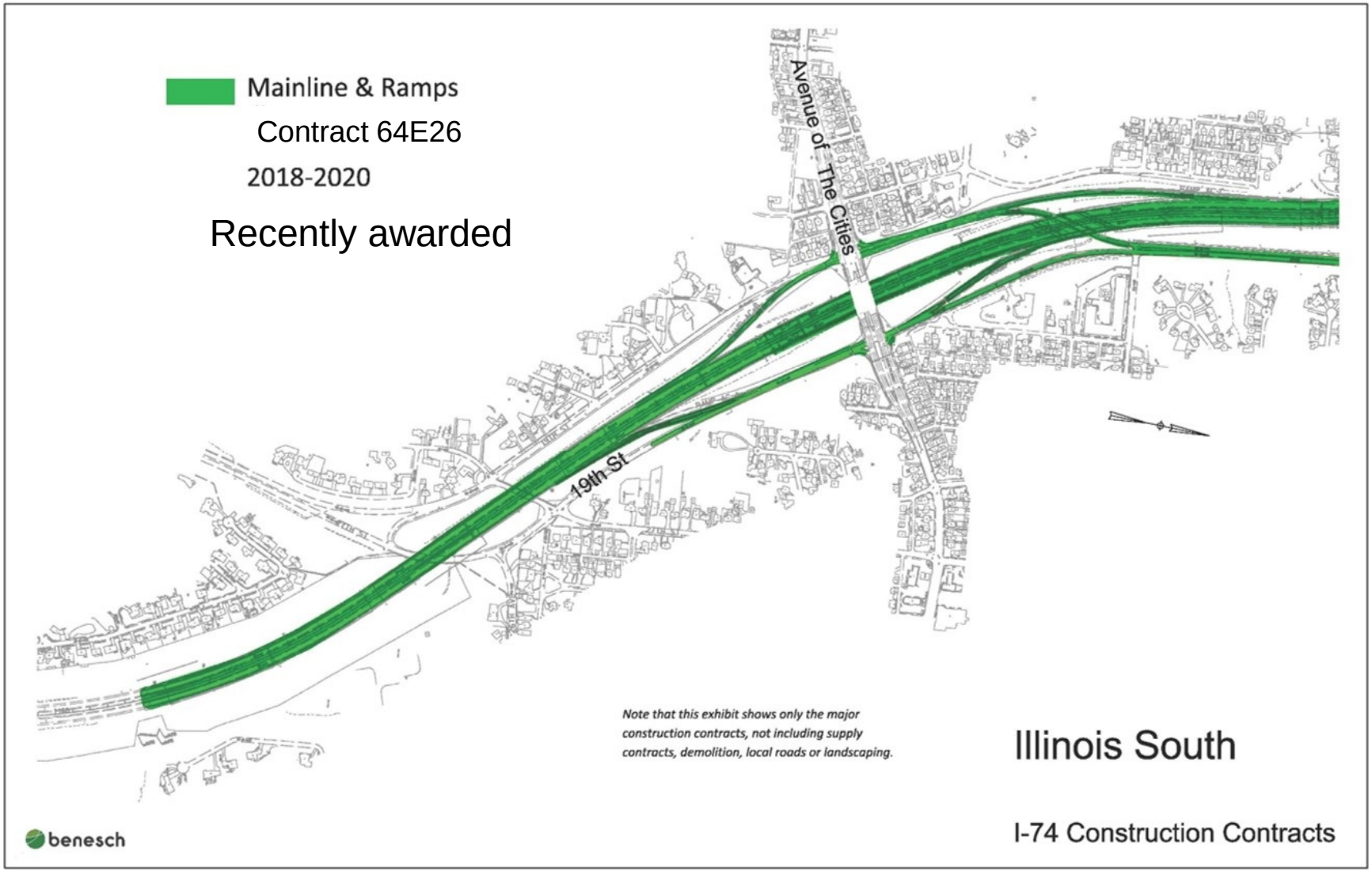

CONCRETE APPLICATIONS

- Focus on the Iowa Projects under Construction:
  - Main River Span (Arch)
  - River Approach Spans and
  - Iowa Westbound Viaduct

CONCRETE APPLICATIONS – MAIN RIVER SPAN

CONCRETE APPLICATIONS: MAIN RIVER SPAN

CONCRETE APPLICATIONS: MAIN RIVER SPAN

Pedestrian Overlook

CONCRETE APPLICATIONS – RIVER APPROACH SPANS

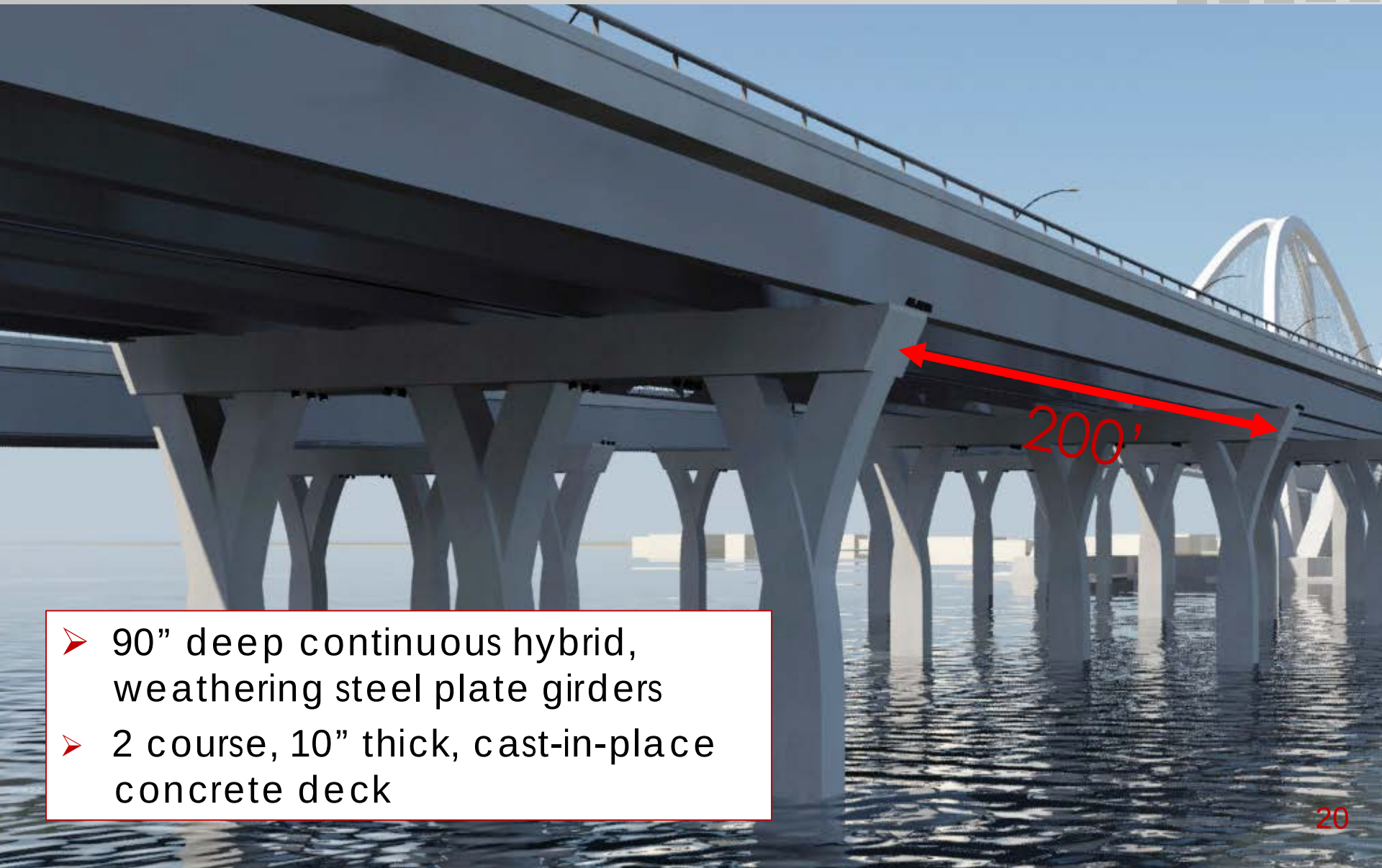

- 90" deep continuous hybrid, weathering steel plate girders
- 2 course, 10" thick, cast-in-place concrete deck

CONCRETE APPLICATIONS – IOWA VIADUCT

ABUTMENT MASKWALLS

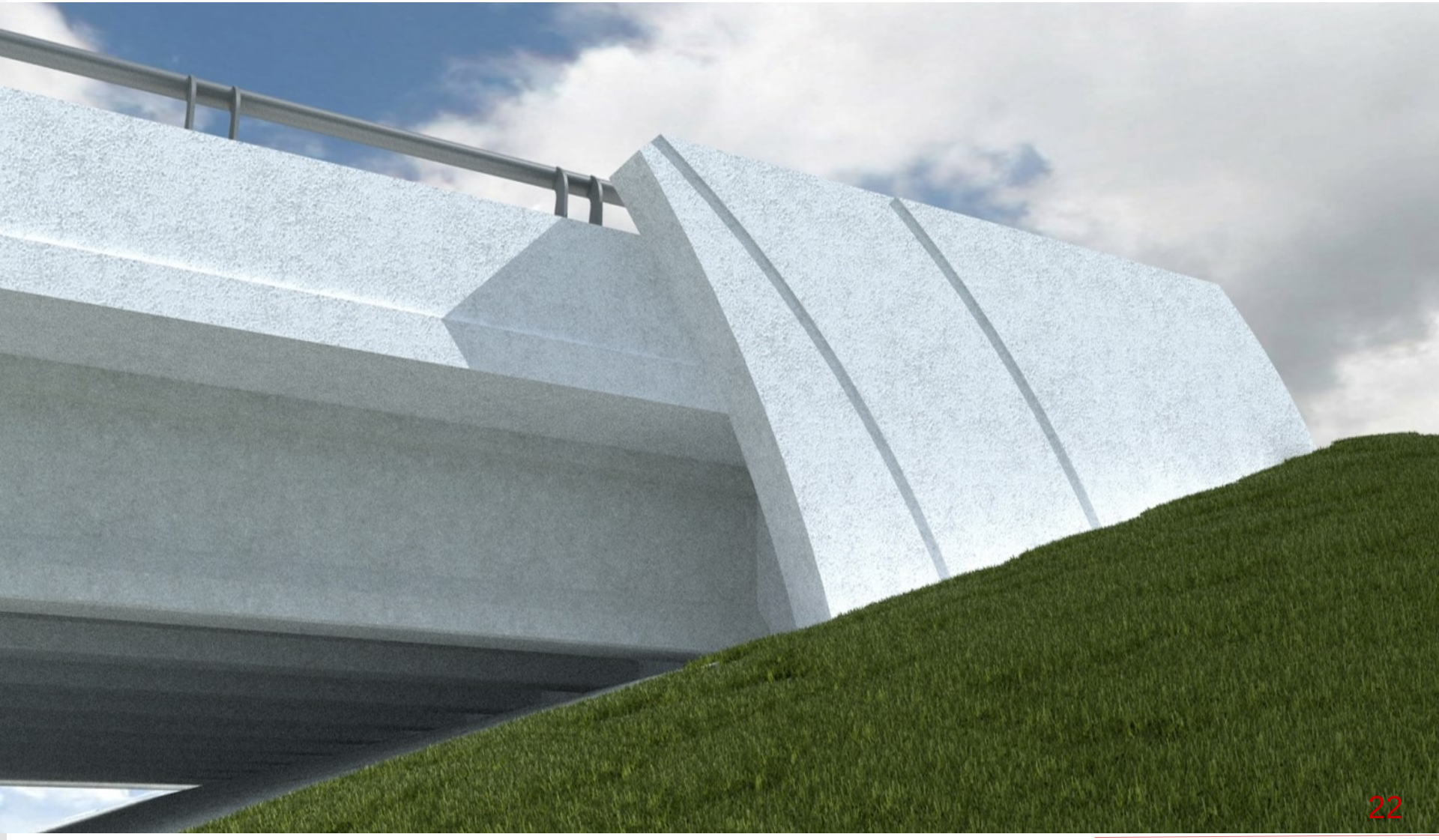

CONCRETE APPLICATIONS

- **Overall Design Objectives:**
  - Achieve higher strength capacity
  - Extend life of structure/Increase durability
  - Facilitate (concrete) placement
  - Minimize joints
  - Eliminate shrinkage cracks
  - To establish quality standards

CONCRETE APPLICATIONS

- **Applications of Various Concrete Specifications**
  - Structural Concrete (4500 psi or greater)
  - High Performance Concrete
  - High Performance Self Consolidating
  - Arch Rib Concrete
  - Mass Concrete
  - Critically Integrally Colored Concrete Overlay

CONCRETE APPLICATIONS

Developmental Specifications for Structural Concrete (4500 psi or greater): DS-15020

- Achieve Higher Strength Capacity
  - Arch Cross Beam Pedestals
  - Arch Structural Deck Slab

Sections 2403 and 2412, and Division 41 of the (Iowa DOT) Standard Specifications applies with modifications as defined in DS-15020

CONCRETE APPLICATIONS

Developmental Specifications for High Performance Concrete (HPC) For Structures: DS-15044

- HPC Concrete
  - Early strength gains
  - Reduced permeability/Higher resistance to chlorides
  - Low creep and shrinkage

CONCRETE APPLICATIONS

Developmental Specifications High Performance Concrete (HPC) For Structures: DS-15044

- Extending Life of Structure
  - Approach Spans Deck (in conjunction with Stainless Steel)
- Increase Durability
  - Maskwalls
  - Abutments
  - Pier Caps under Expansion Joints

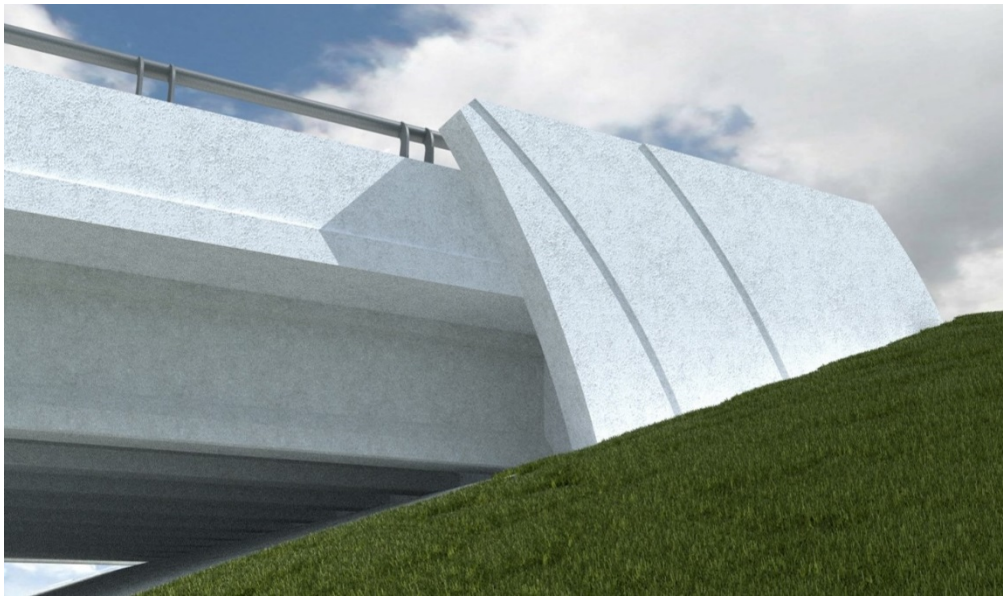

CONCRETE APPLICATIONS

Developmental Specifications for High Performance Self Consolidating Concrete (HP-SCC): DS-150170

- **Specified for:**
  - Approach Spans Columns
  - Viaduct Pier Columns
- **Meet Design Objectives:**
  - Increase durability
  - Facilitate concrete installation
  - Minimize joints

APPROACH SPAN PIERS

APPROACH SPAN PIERS

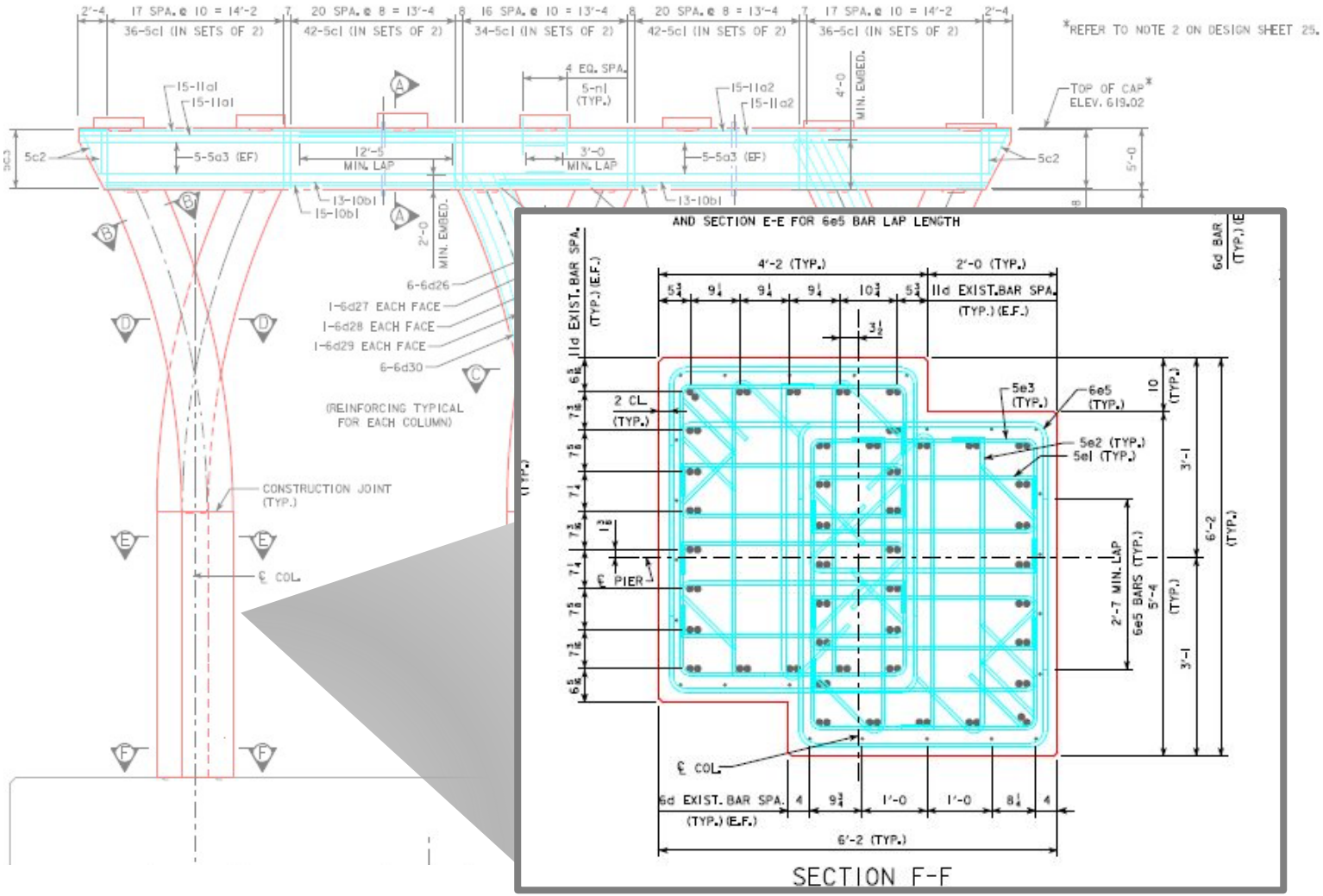

APPROACH SPAN PIERS

Oversize Tank Barge (Empty) Tow

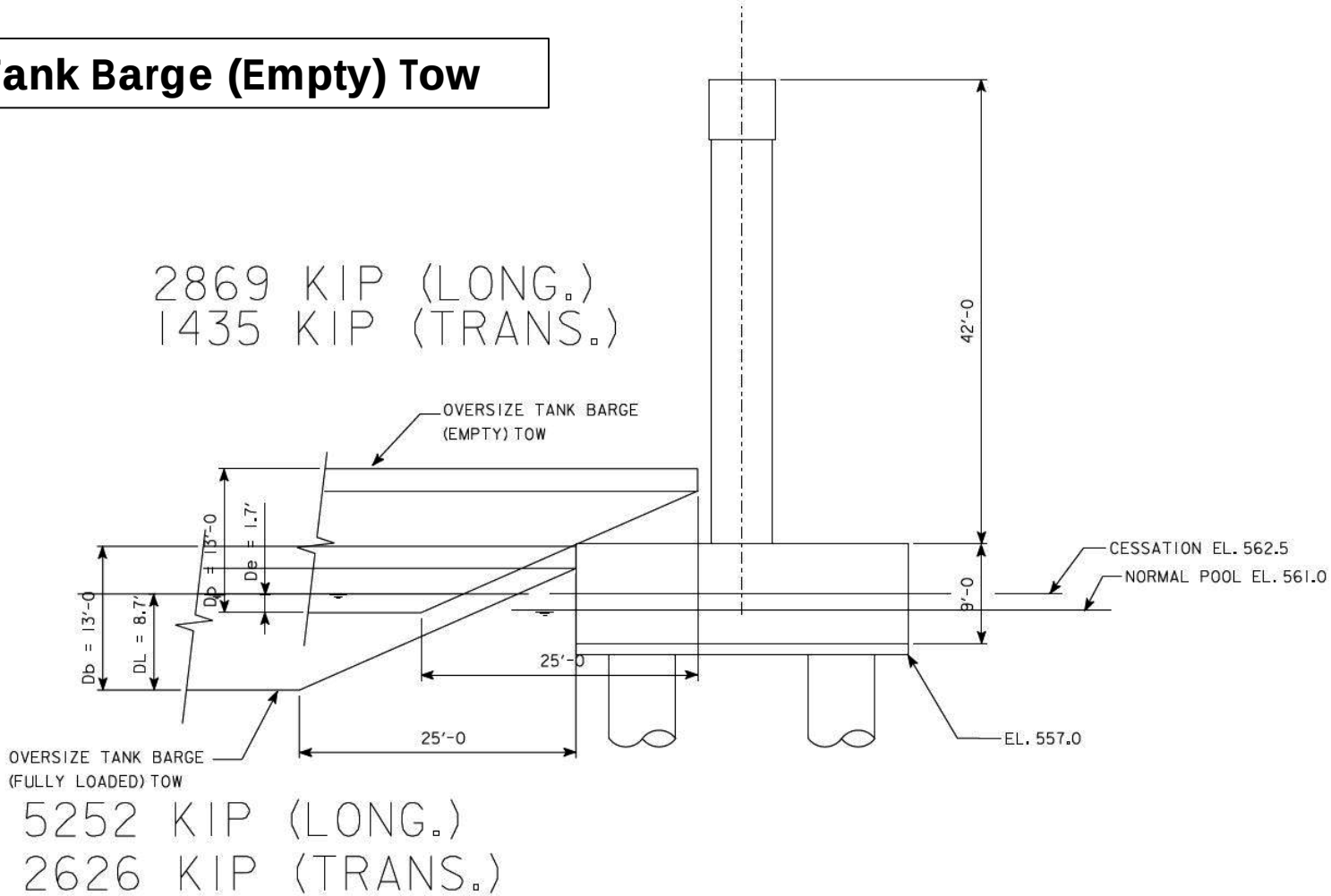

APPROACH SPAN PIERS

Oversize Tank Barge (Loaded) Runaway

2630 KIP (TANKER)(LONG.)
1315 KIP (TANKER)(TRANS.)

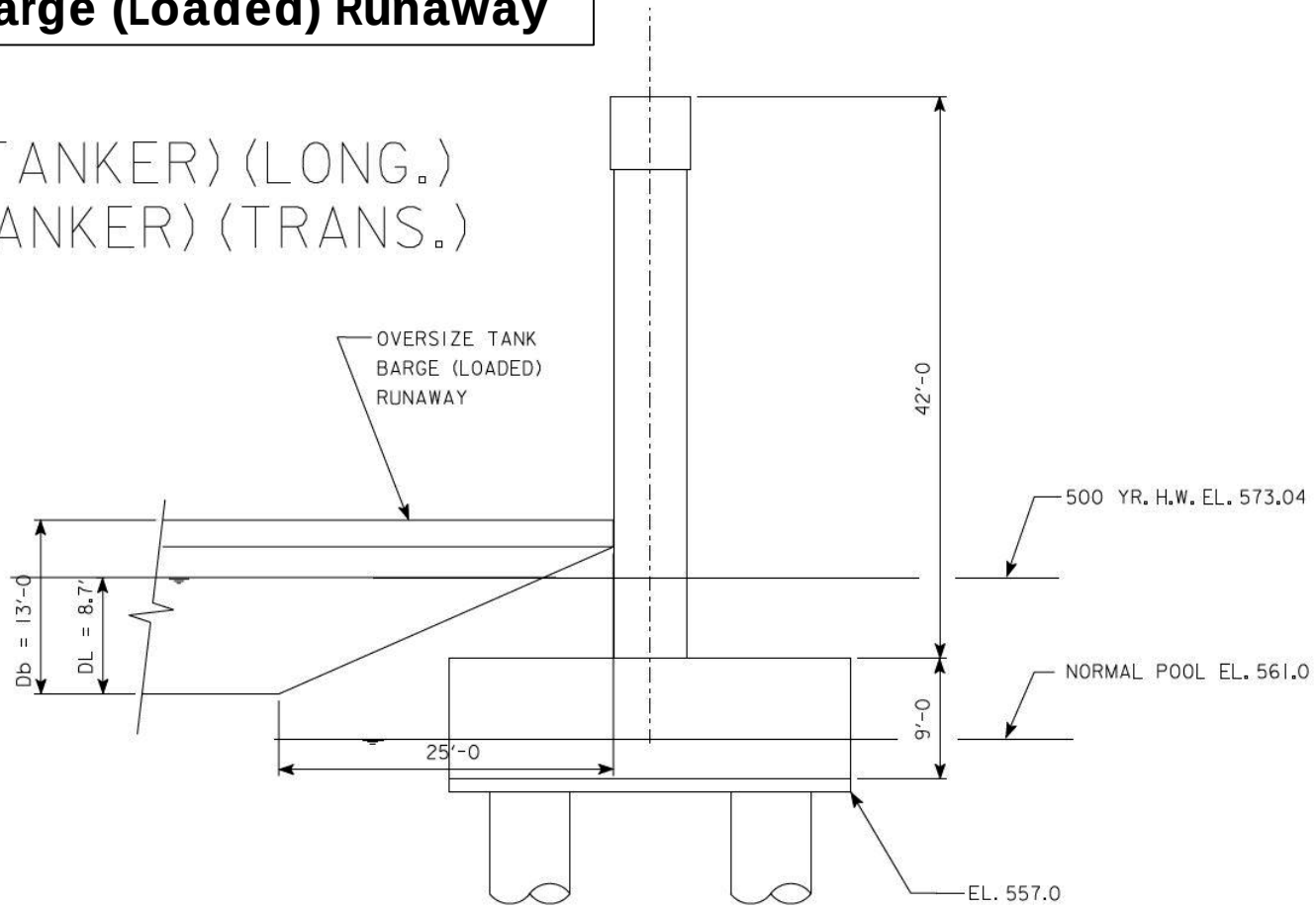

CONCRETE APPLICATIONS

- **Challenges for Approach Piers**
  - Rebar congestion due to design for vessel collision loads and Seismic Zone 3 detailing
  - Tall Columns
  - Westbound Viaduct Piers similar

CONCRETE APPLICATIONS

Developmental Specifications for High Performance Self Consolidating Concrete (HP-SCC): DS-150170

- **Limitations:**
  - Control the heat of hydration
  - Added pressures due to the use of self consolidating concrete and tall pours
  - Requires additional quality control measures

CONCRETE APPLICATIONS

HP-SCC limitations addressed as follows:

- Meet Developmental Specification for Mass Concrete-Control of Heat of Hydration
- Submit QC Plan developed by a PE licensed in State of Iowa
- Perform Trial Batch Concrete – approval will be based on trial batch mix properties and trial batch report
- Perform a Field Demonstration by casting mockup of a Pier
- Design falsework and forms for full hydrostatic head pressure of concrete
- Match color of conventional concrete when poured against conventional concrete; mockup is required

CONCRETE APPLICATIONS

Special Provisions for Arch Rib Concrete: SP-150200

- Defines the requirements for furnishing and installing concrete for the Arch Rib and Cross Beam for Piers 12 and 13

CONCRETE APPLICATIONS: ARCH RIB CONCRETE

CONCRETE APPLICATIONS: ARCH RIB CONCRETE

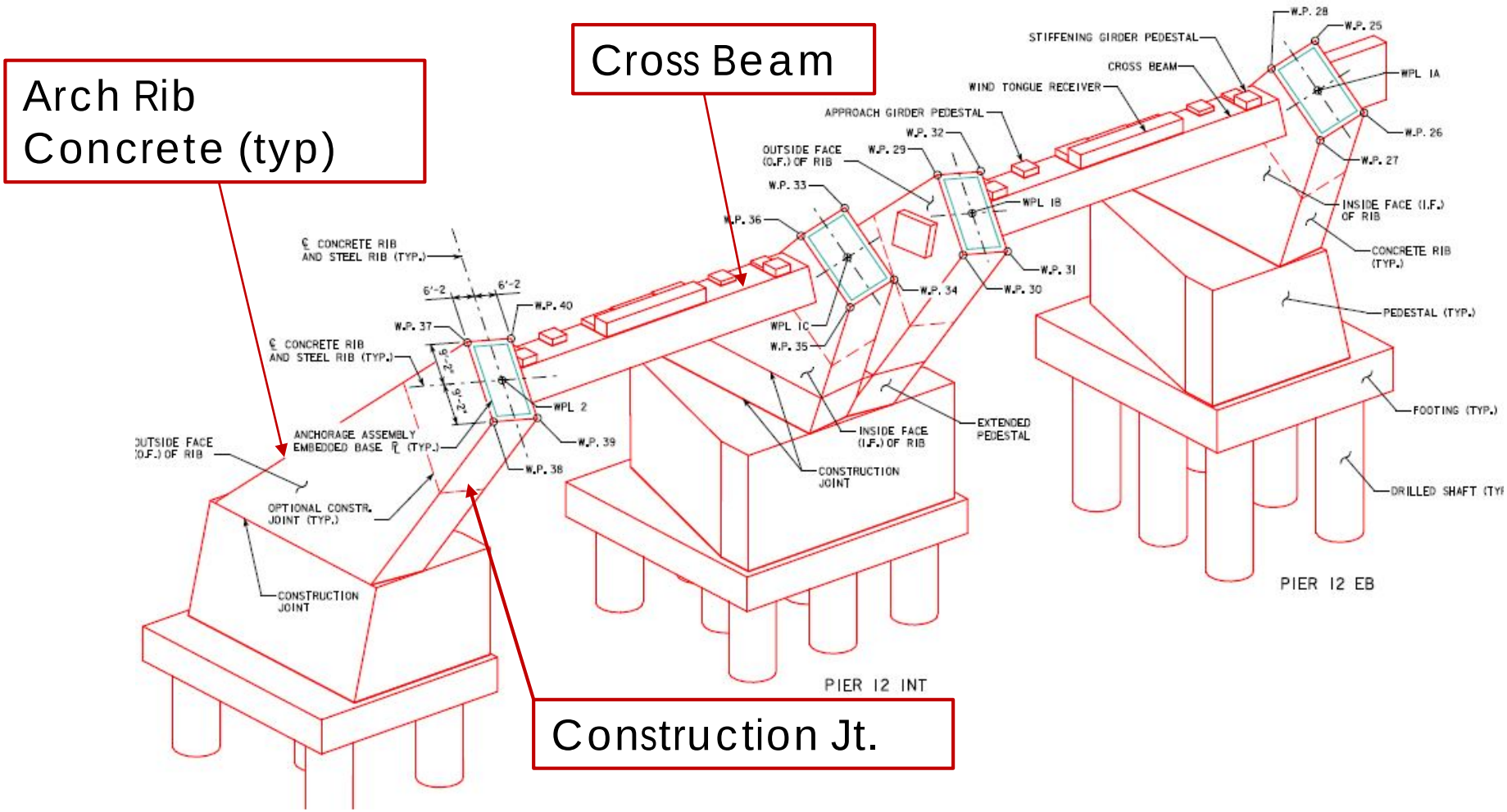

Arch Span- Hybrid Foundation

CONCRETE APPLICATIONS: ARCH RIB CONCRETE

- **Challenges for Arch Rib/Cross Beam**
  - Rebar congestion due to design for vessel collision loads and Seismic Zone 3 detailing
  - Manage the location of Construction joints

- **Design Objectives for Arch Rib/Cross Beam**
  - 100 year design life
  - Transfer of forces from the Steel Ribs to the foundation

CONCRETE APPLICATIONS: ARCH RIB CONCRETE

- Arch Rib Concrete Special Provision Allows Options :
  - High Performance Self Consolidating Concrete
  - High Performance Concrete

- Requires submittal of Quality Control Plan developed by PE licensed in State of Iowa

- Requires Contractor to perform:
  - Trial Batch Concrete – approval based on trial batch mix properties and trial batch report
  - Field Demonstration by casting mockup of the Arch Rib at most congested reinforcement section

CONCRETE APPLICATIONS

Developmental Specifications for Mass Concrete – Control of Hydration: DS-15032

- Produce a structure free of shrinkage cracks that would be a result of heat of hydration during the curing
  - Appropriate concrete mix design
  - Management of concrete temperature
  - Management of temperature differential

CONCRETE APPLICATIONS

Developmental Specifications for Mass Concrete – Control of Hydration: DS-15032

- Applies to
  - Concrete footing with a least dimension greater than 5 feet
  - Other concrete placements with a least dimension greater than 4 feet

- Additional requirements for when the least dimension greater than 6.5 feet

- Does not apply to concrete drilled shafts.

CONCRETE APPLICATIONS

Developmental Specifications for Mass Concrete – Control of Hydration: DS-15032

- Requires Thermal General Control Plan
  - standard of care for mass concrete members,
  - ambient temperature assumptions,
  - incoming concrete temperature assumptions,
  - critical dimension assumptions
  - material properties

- This document accompanies each thermal control plan for the structural elements defined in Contract Docs

CONCRETE APPLICATIONS

- TCP Plans are submitted for the following:
  - All pier stems with a critical dimension of 4 ft. 2 in.
  - All pier stems with a critical dimension of 6 ft. 2 in.
  - All pier caps with Mass Structural concrete
  - All pier caps with HPC Structural concrete
  - All footings with Mass Structural concrete
  - All footings with HPC Structural concrete
  - Pier 12 and 13 Pedestals, Ribs and Crossbeams

CONCRETE APPLICATIONS

- **TCP plans with a least dimension of greater than 6.5 feet have additional requirements:**
  - Developed by PE licensed in State of Iowa
  - Proposed methods to achieve required concrete temperature & control concrete temperature differential to prevent thermal cracking during both warm and cold weather
  - Information on the temperature sensing and recording equipment to be used

CONCRETE APPLICATIONS

- TCP plans with a least dimension of greater than 6.5 feet have additional requirements:
  - Mass concrete placement plan to ensure prevention of concrete cold joints
  - Provide specific options for controlling the temperature gradient for both warm and cold weather placements
  - Applies to all footing elements, all pedestal and extended pedestal elements, all rib elements and all cross beam elements (excluding the cross beam pedestals)

CONCRETE APPLICATIONS: MASS CONCRETE

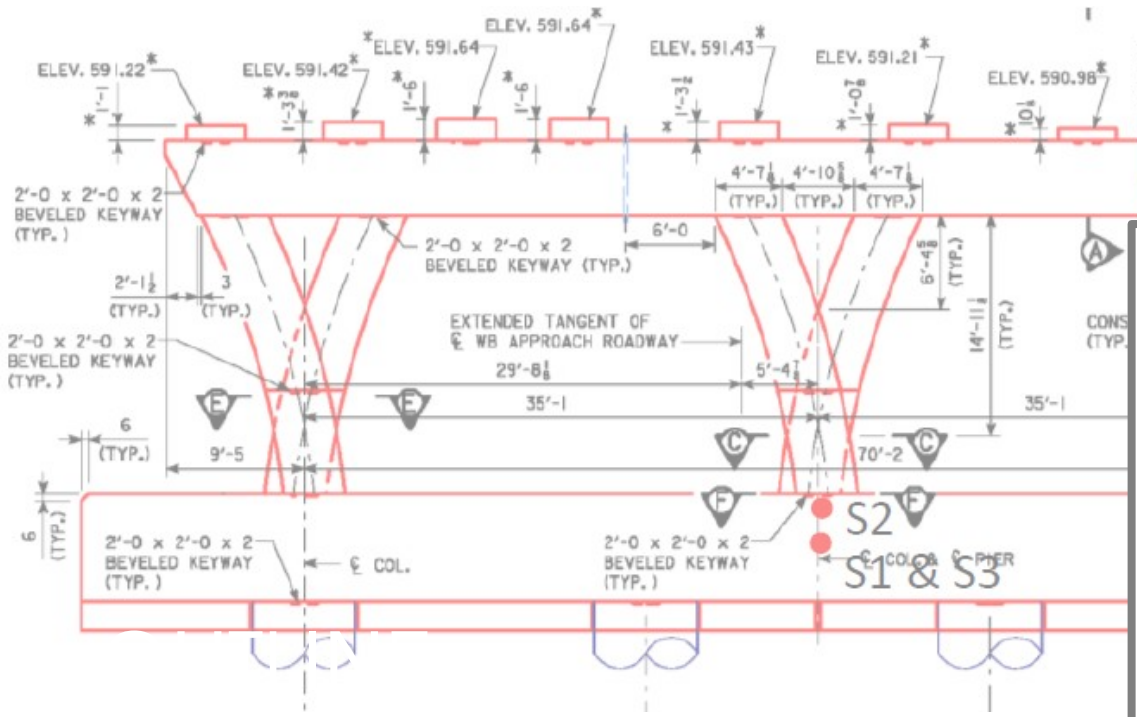

Figure 1: EBP4 Footing Eleva

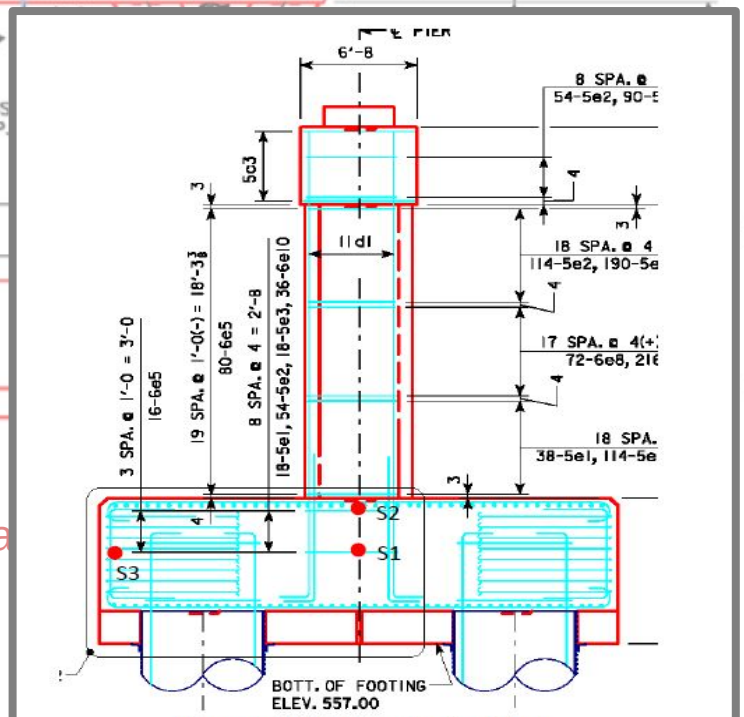

Figure 2: EBP4 Footing Section View

CONCRETE APPLICATIONS: MASS CONCRETE

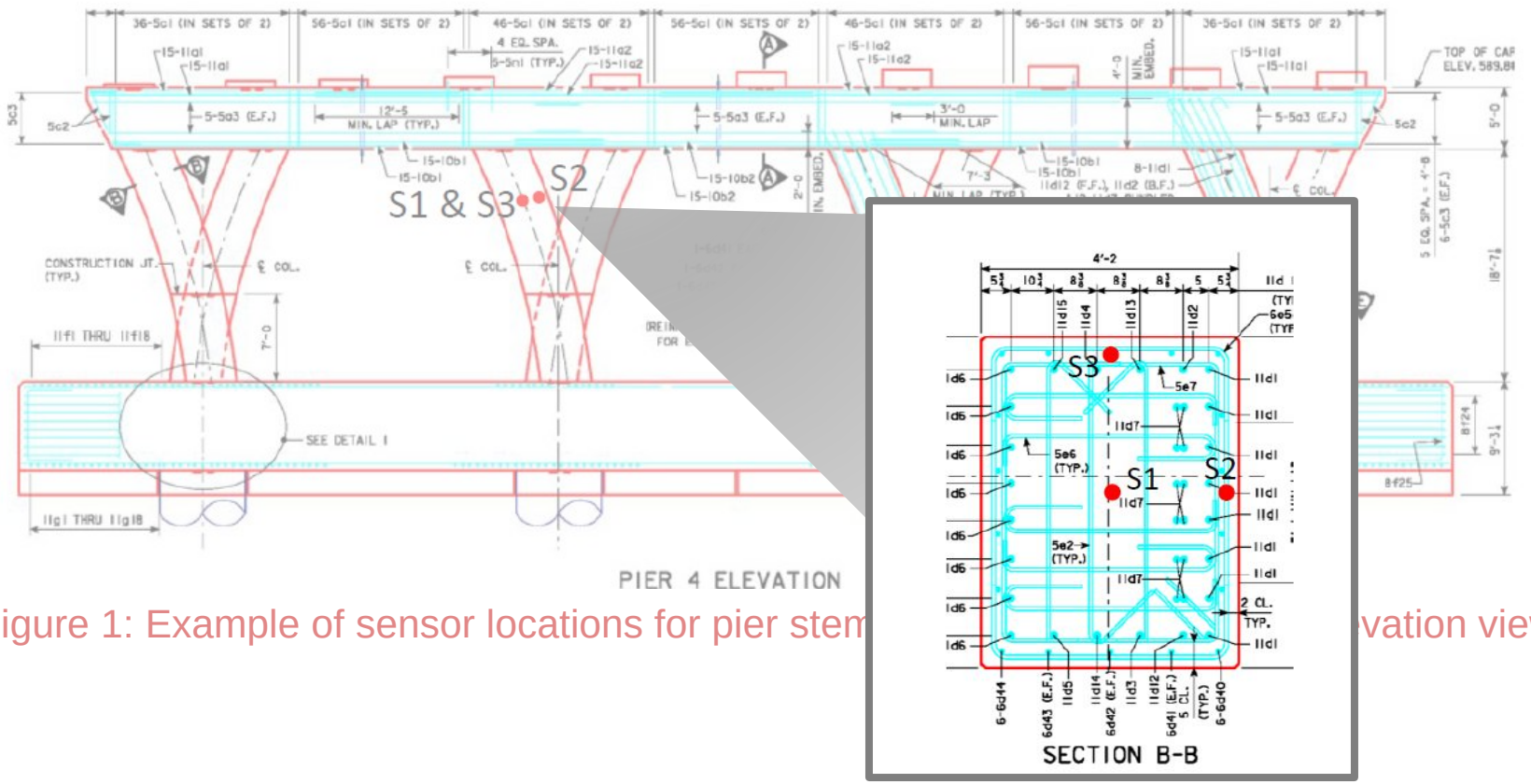

Figure 1: Example of sensor locations for pier stem … vation view

CONCRETE APPLICATIONS

Special Provisions for Critically Integrally Colored Concrete Overlay: DS-150204

- **Design Objectives:**
  - Achieve Aesthetic Objectives
  - Increase durability
  - To establish quality standards

CONCRETE APPLICATIONS - COLORED CONCRETE OVERLAY

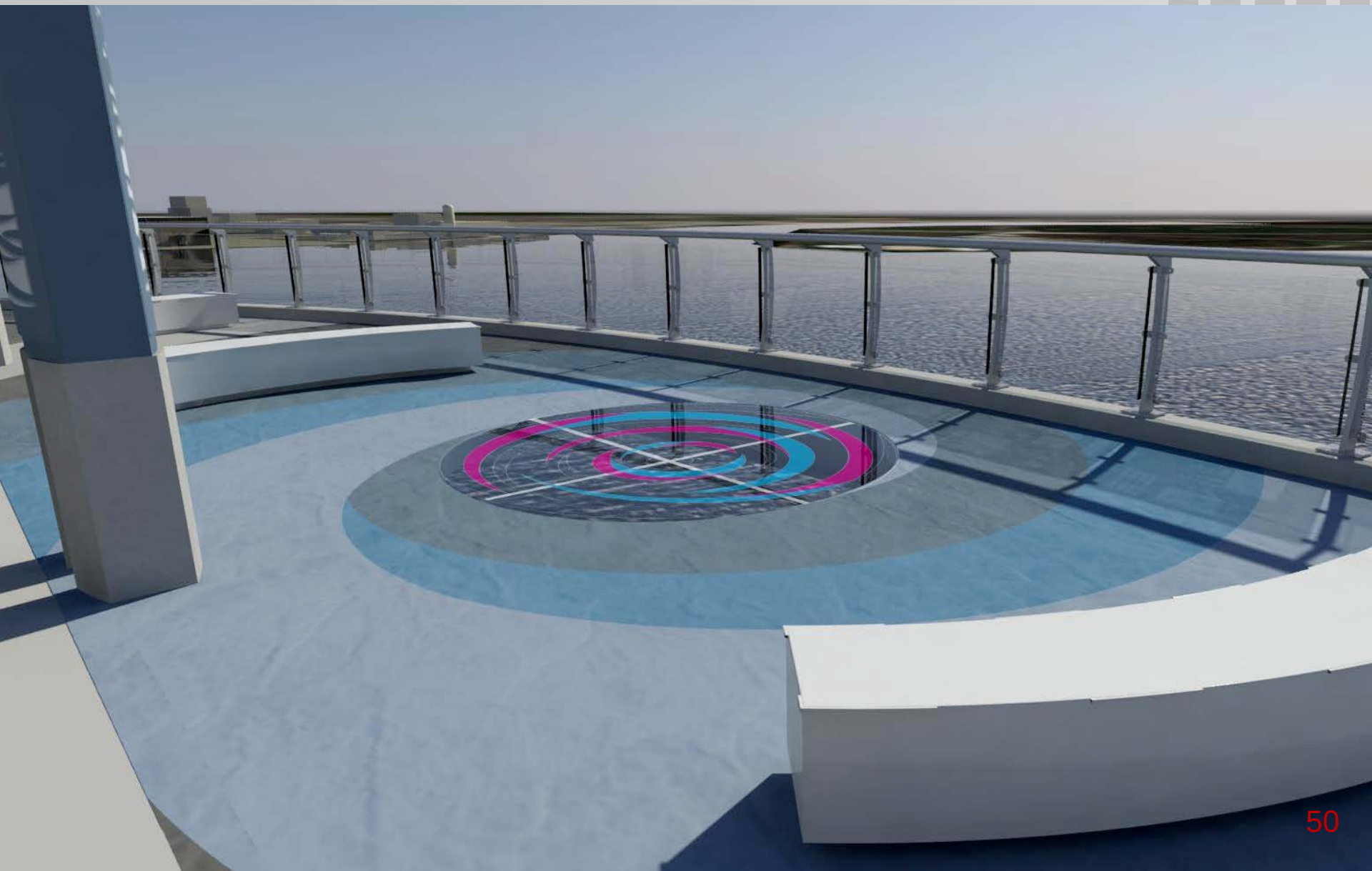

CONCRETE APPLICATIONS - COLORED CONCRETE OVERLAY

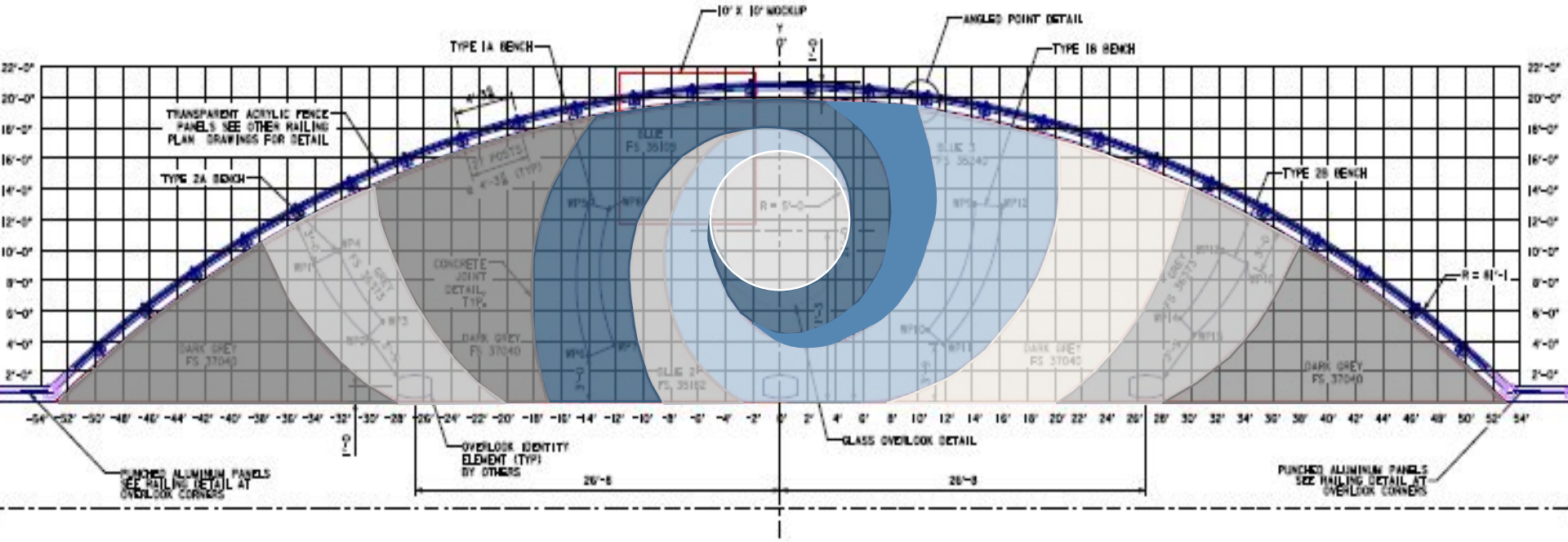

CONCRETE APPLICATIONS

Concrete Colored Mockup Submittal

- At least 60 days prior to production work
- Location selected by Engineer
- Finish one 10ft x 10 ft area simulating location defined in plans
- Acceptance is per visual and slip-resistance project defined standards
- Remains at site throughout completion of work for use as quality standard for finished work

CONCRETE DELIVERY – ARCH & APPROACH

- Concrete Mix Supplier: Hahn Ready Mix
- Plant Locations:
  - Davenport (existing facility)
  - Riverstone (new facility expect early 2018)
- Arch & Approach Piers (currently):
  - Davenport over I-74 to IL DOT side then onto barges
  - 3 to 5 trucks per barge
- Arch Pier 13 & Approach Piers 14 and 15:
  - Use slick-line with Barges (Iowa side)

CONCRETE DELIVERY: CHALLENGES

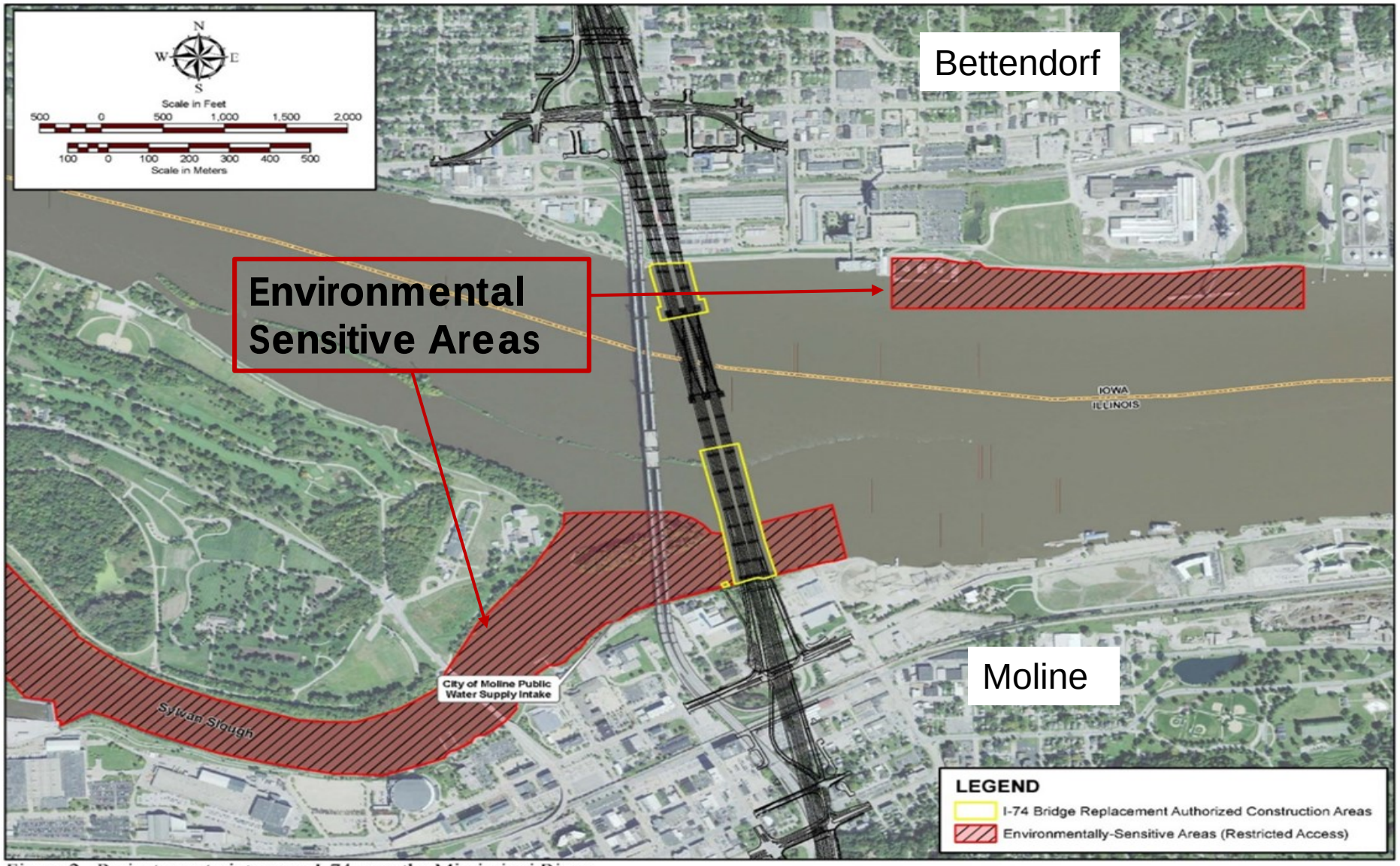

Figure 2. Project constraints map, I-74 over the Mississippi River.

CONCRETE DELIVERY: CHALLENGES

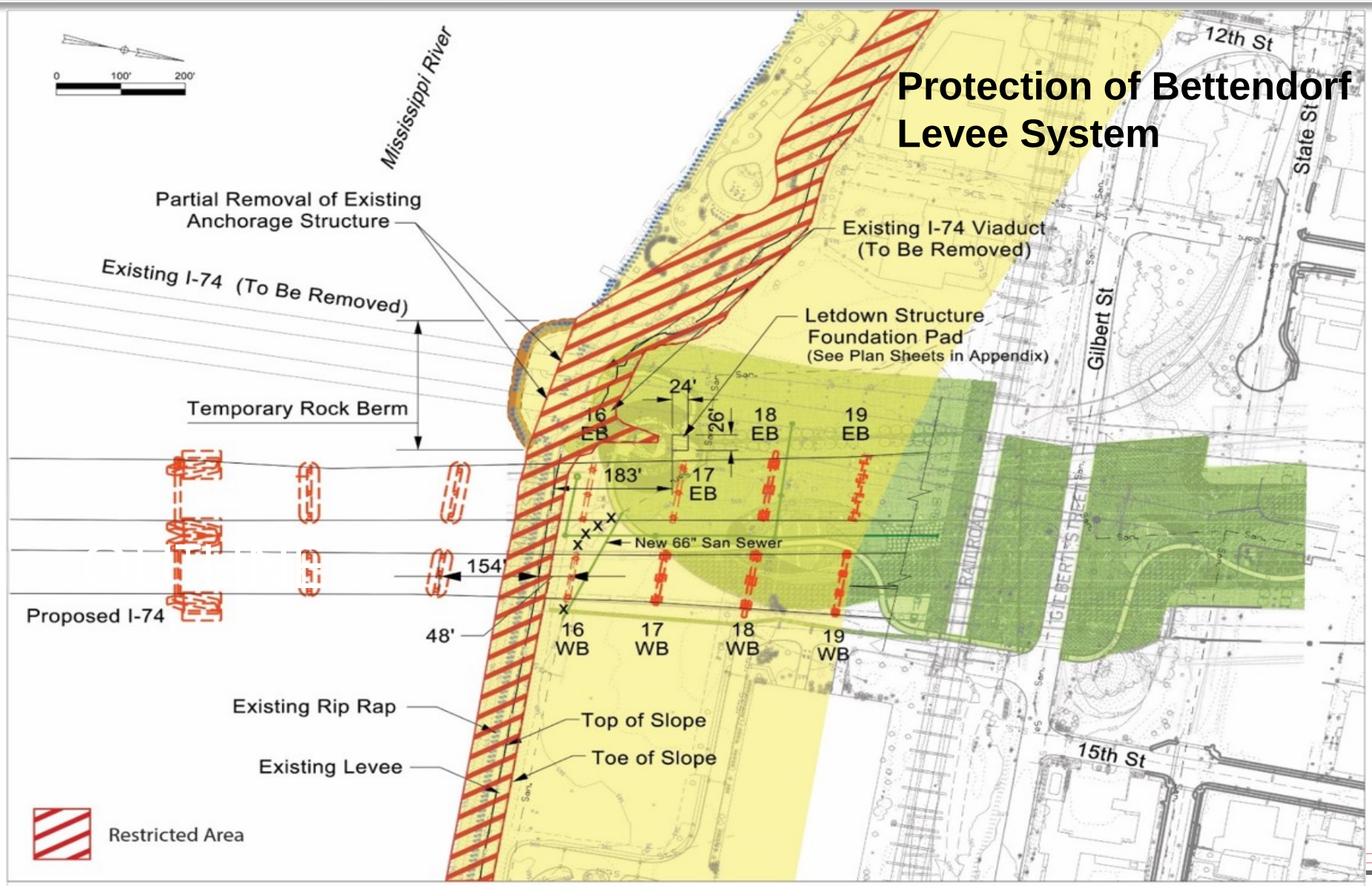

CONCRETE DELIVERY – ARCH & APPROACH

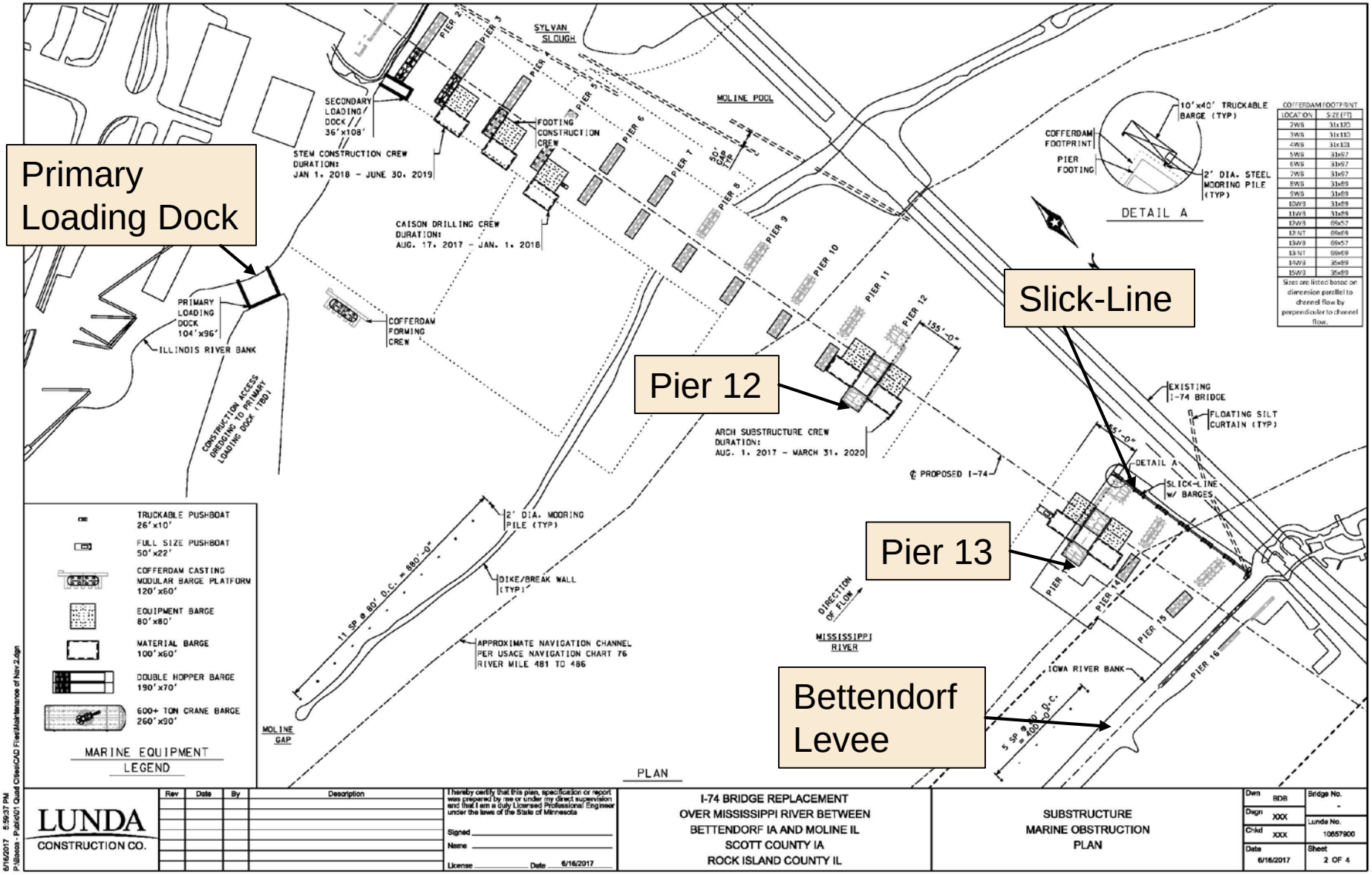

CONCRETE DELIVERY – ARCH & APPROACH

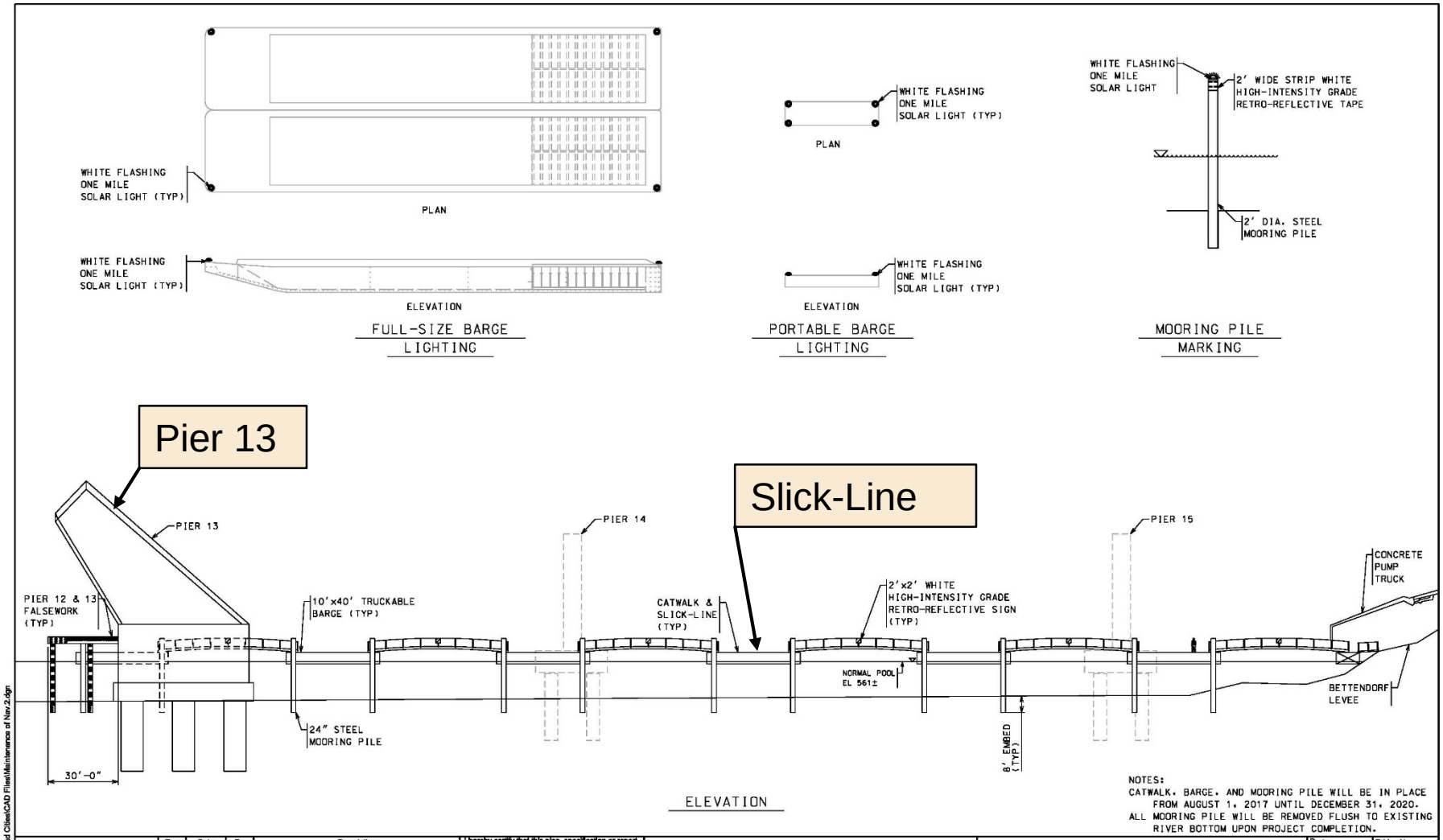

CONCRETE DELIVERY – ARCH & APPROACH

CONCRETE PLACEMENT – ARCH & APPROACH

CONCRETE DELIVERY – WB VIADUCT

- Concrete Mix Supplier: Hahn Ready Mix
- Plant Locations:
  - Davenport
  - Moline as backup
- Viaduct Piers:
  - All piers on land
  - Easily accessible by trucks

CONCRETE PLACEMENT – WB VIADUCT

- Crane and bucket will be used to pour concrete into the hoppers
- Section 1 will be placed with hopper/tremie system flowing through pour window 1
- Section 2 will be placed with hopper/tremie system flowing through pour window 2
- Section 3 will be placed with hopper/tremie system
- Section 4 will be placed with hopper/tremie system
- Section 5 will be placed directly from the bucket
- Concrete will have a free fall distance of less than 6" at all times

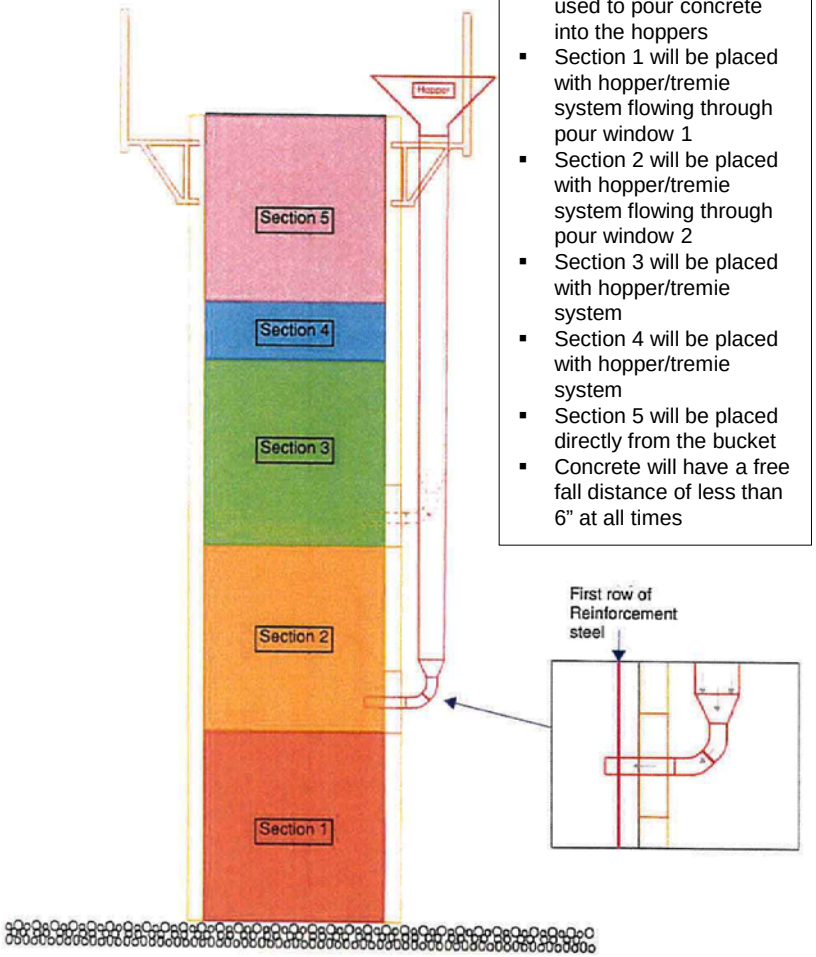

SIDE VIEW

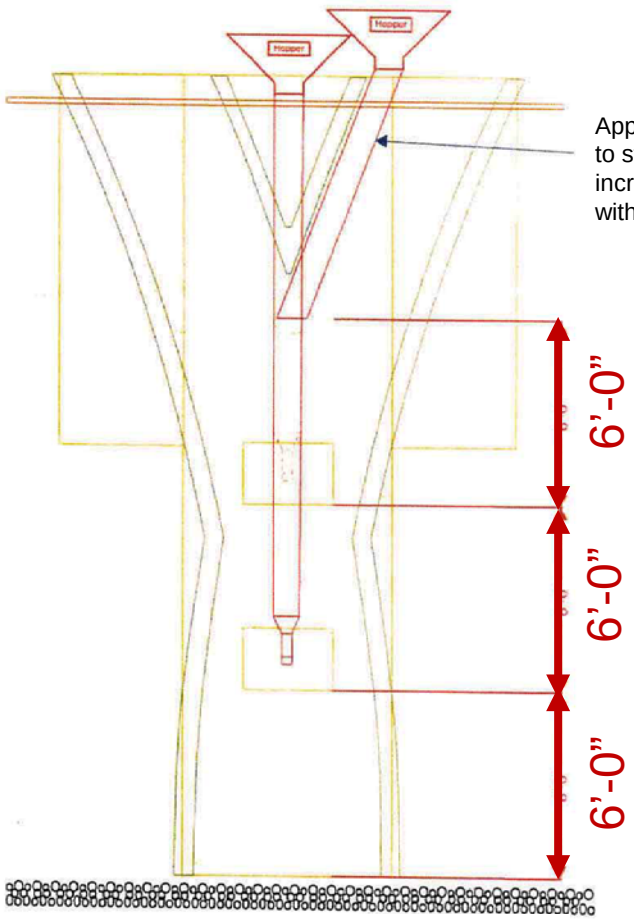

POUR WINDOW VIEW

CONCRETE DELIVERY – VIADUCT

CONCRETE PLACEMENT – WB VIADUCT

CONCRETE BY THE NUMBERS

IOWA BRIDGES		
ITEM		CY
HP SELF-CONSOLIDATING CONCRETE (HP-SCC)		5,347
STRUCTURAL CONCRETE (BRIDGE)		49,365
HIGH PERFORMANCE STRUCTURAL CONCRETE		19,708
STRUCTURAL CONCRETE 4500 PSI (31 MPA) OR GREATER		3,714
ARCH RIB CONCRETE		8,312
CRITICAL INTEGRALLY COLORED CONCRETE OVERLAY		75
CONCRETE DRILLED SHAFT, 84 IN. DIAMETER		8,071
CONCRETE DRILLED SHAFT, 114 IN. DIAMETER		761
CONCRETE DRILLED SHAFT, 120 IN. DIAMETER		2,947
Total Iowa Bridge Concrete		98,300

Total Bridge (Iowa + IL) Concrete 118,564

THANK YOU!